Safety Communication Fieldbus System

IP67 RoHS

Safety / General purpose I/O integrated into one manifold

IEC 61508/IEC 62061 SIL3/SIL CL3
ISO 13849-1 PL e

New
- PROFINET/PROFIsafe and EtherCAT/FSoE compatible
- Valve manifold zone control compatible
- Analog I/O compatible

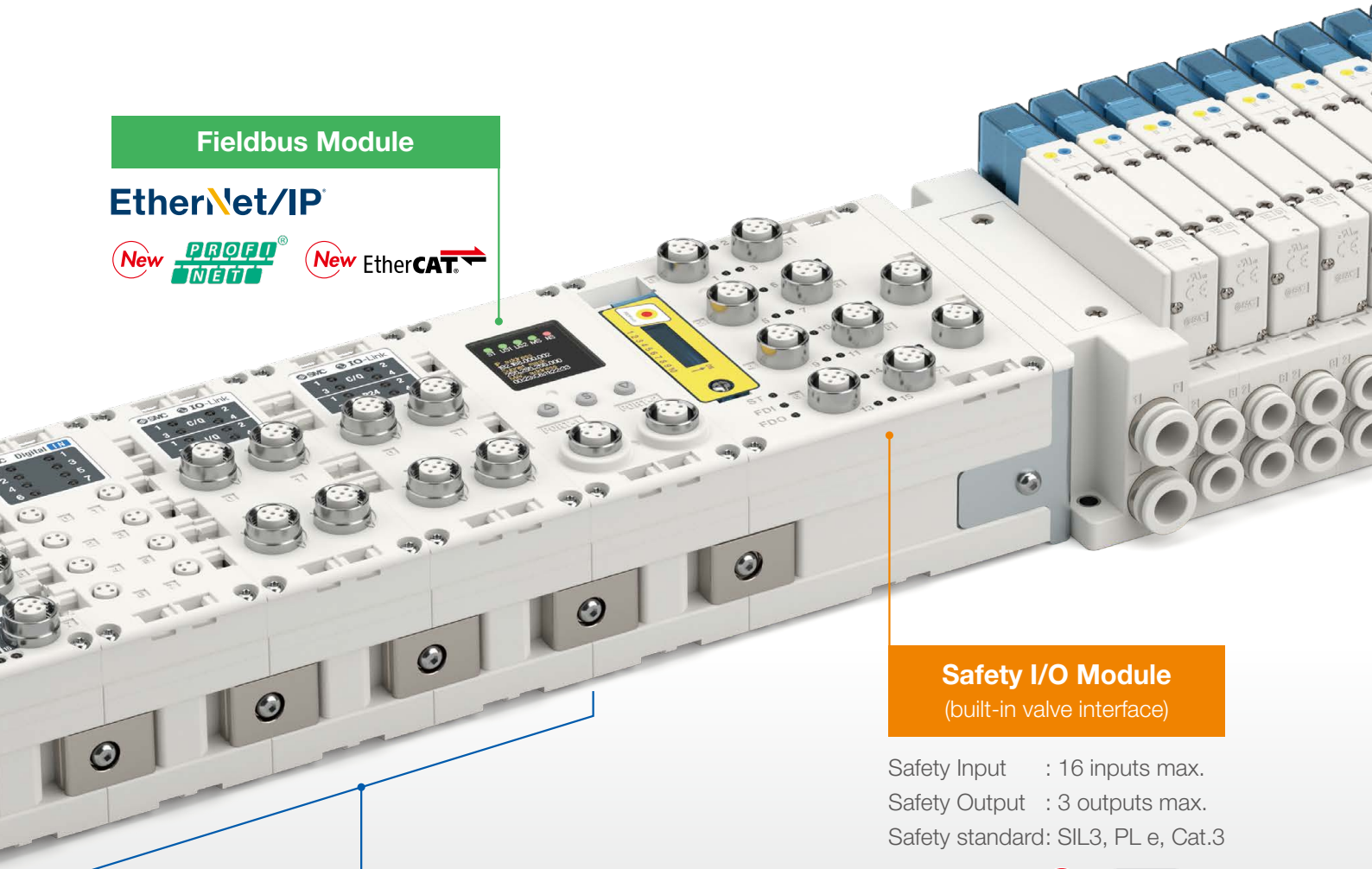

Fieldbus Module

EtherNet/IP
New PROFINET New EtherCAT

Safety I/O Module
(built-in valve interface)

Safety Input : 16 inputs max.
Safety Output : 3 outputs max.
Safety standard: SIL3, PL e, Cat.3

CIP Safety
New PROFIsafe
New Safety over EtherCAT

General Purpose I/O Module

Digital Input/Output, Analog Output/I/O, IO-Link Module
Up to 9 modules can be connected (in any order)

EX600 Series

SMC

CAT.E02-30B A

Safety / General purpose I/O modules integrated

Fieldbus Module

EtherNet/IP PROFINET EtherCAT

- Supports Safety communication

Safety I/O Module (built-in valve interface)

CIP Safety PROFIsafe Safety over EtherCAT

- Safety input: 16 inputs max.
- Safety output: 3 outputs max. (power supply to valves and external devices)
- Valve interface
  Max. number of solenoids: 32
  Max. number of solenoids: 128, Max. number of electro-pneumatic regulators: 4

General Purpose I/O Module

- Digital input/output, Analog output/I/O, IO-Link
- M8/M12 connector
- Up to 9 modules max. (in any order)

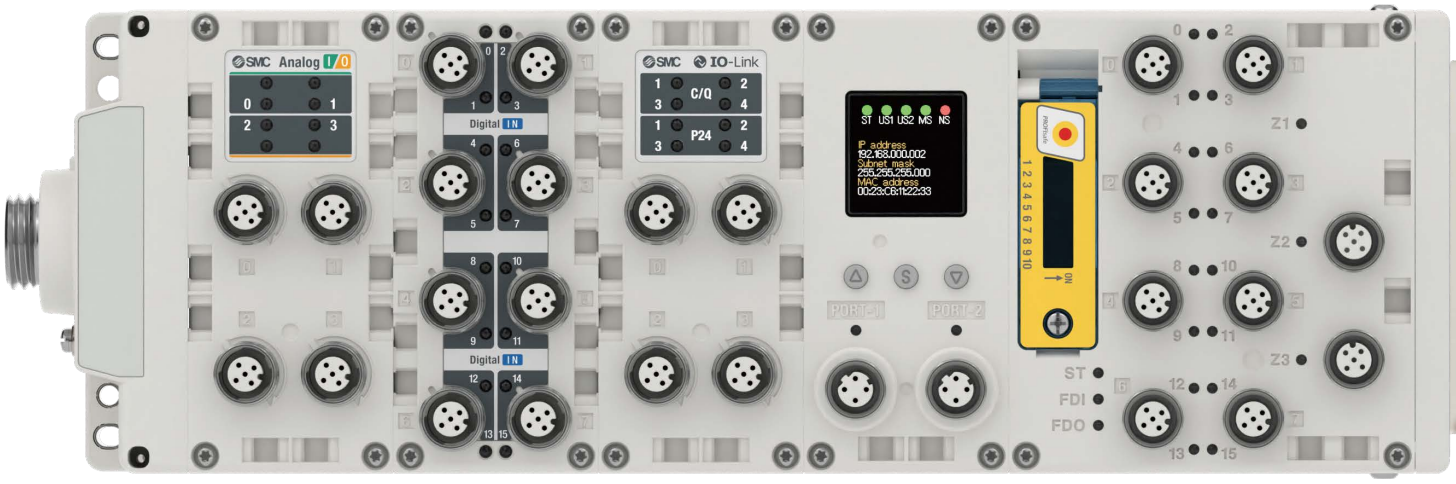

End plate (Power supply)

General Purpose I/O Module: Analog I/O | Digital I/O | IO-Link

Fieldbus Module

Safety I/O Module: Valve interface | Safety input | Safety output

Analog input device

Pressure sensor

Flow sensor

Analog output device

Electro-pneumatic regulator, etc.

Digital output device

Valve manifold (Plug lead)

Solenoid valve

Electric actuator

Ionizer

Other products
Lamps (indicators), relays, buzzers, etc.

IO-Link device

Auto switch

Actuator position sensor

Pressure switch

Gap checker

Terminal unit

Vacuum unit

Flow switch

Ionizer

Step motor controller (Electric actuator)

Digital input device

Auto switch

Pressure switch

Flow switch

Other products
Proximity sensors, photoelectric switches, limit switches, etc.

SMC

into one manifold

The EX600-FV□□ is compliant with functional safety standards IEC 61508/IEC 62061 and ISO 13849-1 and is designed to facilitate the safety design of your devices and facilities. The EX600-FV□□ has been certified by a third-party organization (TÜV SÜD) up to the safety levels of the following standards.

- **IEC 61508/IEC 62061: SIL3/SIL CL3**
- **ISO 13849-1: PL e**

SIL (Safety Integrity Level)

The safety level defined by the international standard IEC 61508 / IEC 62061.
The level of safety is expressed in 4 levels, from SIL 1 to 4, with SIL 1 being the lowest and SIL 4 being the highest.

PL (Performance Level)

A scale used to specify the capabilities of safety-related parts, as defined by the international standard ISO 13849. The level of safety is expressed in 5 levels, from PL a to PL e, with PL a being the lowest and PL e being the highest safety function capability.

Electro-pneumatic regulator

Valve

Power supply for valve

Safety I/O device

Residual pressure release valve

Safety input device

Door switch | Laser curtain | Laser scanner | Emergency stop button

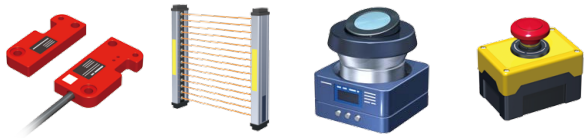

Examples of safety input connection devices (commercially available)

Can be used as an IO manifold

- Can be configured without connecting a valve

∗ Can only be connected to the EX600-FV□1

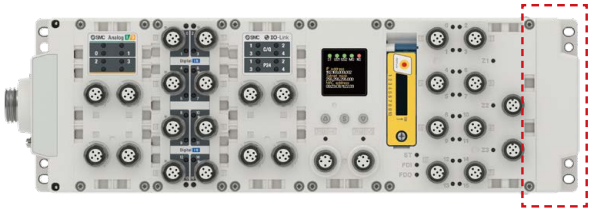

End plate
(U side)

Safety Output

Features

Safety Output (3 outputs)

By turning off the safety output according to a command from the safety PLC, the power supply to the valve and external devices is cut off and a safe state is entered.
Using safety outputs for valves and dividing the power supply within the valve manifold enables valve zone control.

Redundant safety switch

The safety output of this product is made redundant by two safety switches, one on the 24 V side and one on the 0 V side. Diagnostics is performed continuously, and if an abnormality is detected in the safety output, the safety switch is turned OFF and the system transitions to a safe state.

Safety I/O Module Variations

Part no.	Number of safety inputs	Number of safety outputs	For external devices	Number of general purpose outputs	
		For valves		Max. number of solenoids	Connectable series
EX600-FV□1	16	1	2	32	**JSY, SY, VQC**
EX600-FV□2	16	1	2	128*1	**JSY-L/P, IITV23**
EX600-FV□3	16	3	—	128*1	**JSY-L**
EX600-FV□4	16	2	1	128*1	**JSY-L/P, IITV23**

*1 The max. number of solenoids depends on the power consumption of the valve solenoids operating simultaneously.

Safety Output Definition

The safe state of the EX600-FV□ is a condition in which the safety output is turned OFF, to shut off the power supply to the valve manifold connected to this product. The safety functions and safety states of devices, including peripheral circuits of equipment, etc. connected to this product are not within the scope of application of this product.

EX600-FV□1

Safety output: 1 output for valves, 2 outputs for external devices
Max. number of solenoids: 32 (**JSY**, **SY**, **VQC**)

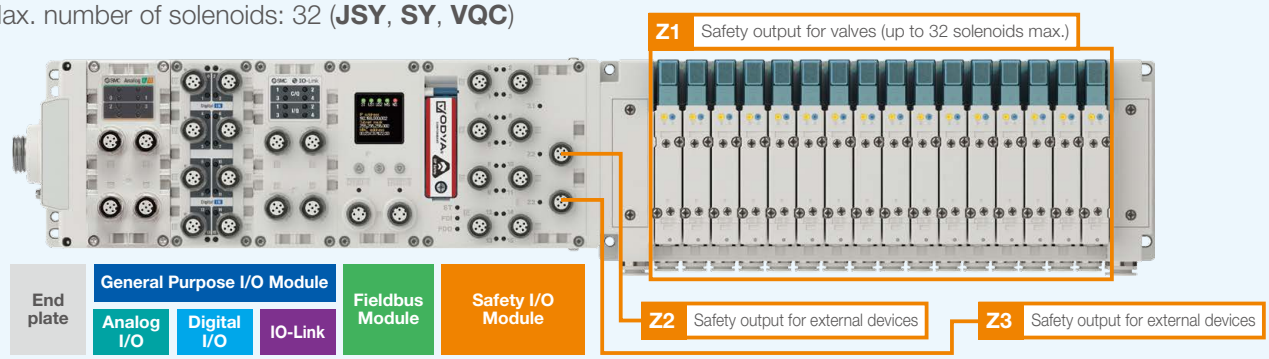

Block diagram

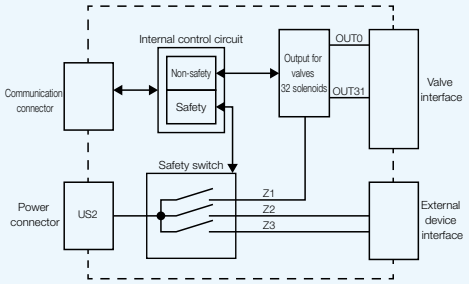

US2: Power supply for drive

Connectable Solenoid Valve Series

Series		Max. number of solenoids
IP67	SY3000, SY5000, SY7000	32
IP67 *1	JSY1000, JSY3000, JSY5000	32
IP67	VQC1000, VQC2000, VQC4000, VQC5000	24

*1 JSY1000 is IP40.

EX600-FV□2

Safety output: 1 output for valves, 2 outputs for external devices
Max. number of solenoids: 128 (**JSY-L/P**)

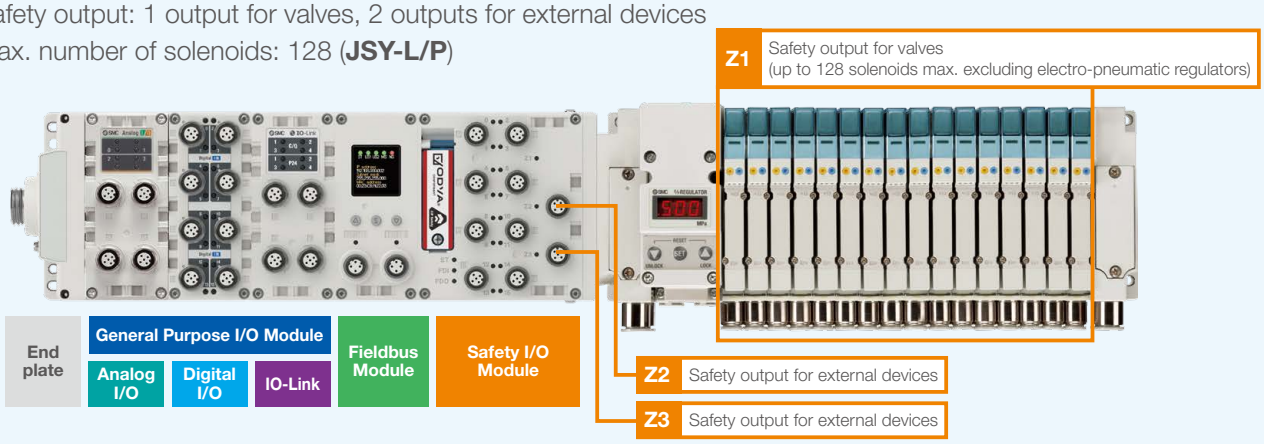

Block diagram

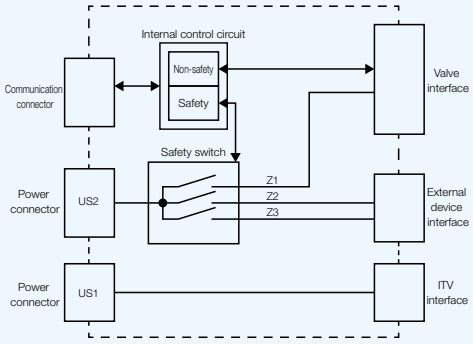

US1: Power supply for control/input
US2: Power supply for drive

Connectable Solenoid Valve/Electro-Pneumatic Regulator Series

Series		Max. number of solenoids	Max. number of electro-pneumatic regulators
IP67 *1	JSY1000-L, JSY3000-L	128	Not compatible
IP65	JSY3000-P*2	128	4
IP65	IITV23	Not compatible	4

*1 JSY1000 is IP40.
*2 For the JSY-P type with a built-in electro-pneumatic regulator, only valve size 3000 can be selected.
* Valve specifications are the same as the JSY series.

EX600-FV□3

Safety output: 3 outputs for valves
Max. number of solenoids: 128 (**JSY-L**)

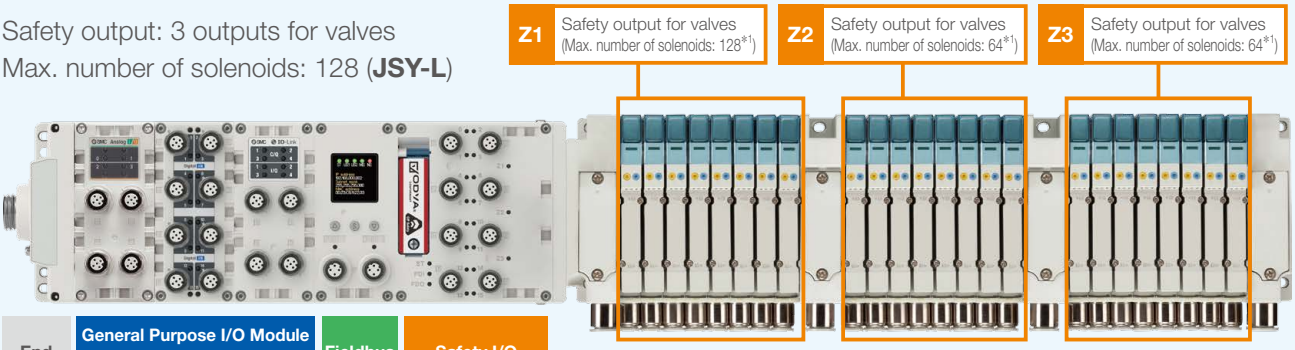

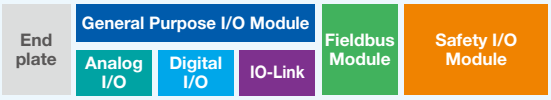

*1 The max. number of solenoids depends on the power consumption of the valve solenoids operating simultaneously.
* The max. number of solenoids per manifold is 128.
* To allow for valve manifold zone control, an intermediate SUP/EXH block assembly is required between each zone.

Block diagram

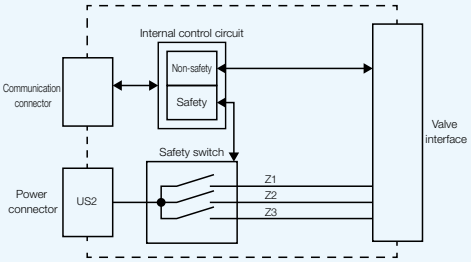

US2: Power supply for drive

Connectable Solenoid Valve/Electro-Pneumatic Regulator Series

Series		Max. number of solenoids	Max. number of electro-pneumatic regulators
IP67 *1	**JSY1000-L, JSY3000-L**	128	Not compatible

*1 JSY1000 is IP40.
* Valve specifications are the same as the JSY series.

EX600-FV□4

Safety output: 2 outputs for valves, 1 output for external devices
Max. number of solenoids: 128 (**JSY-L/P**)

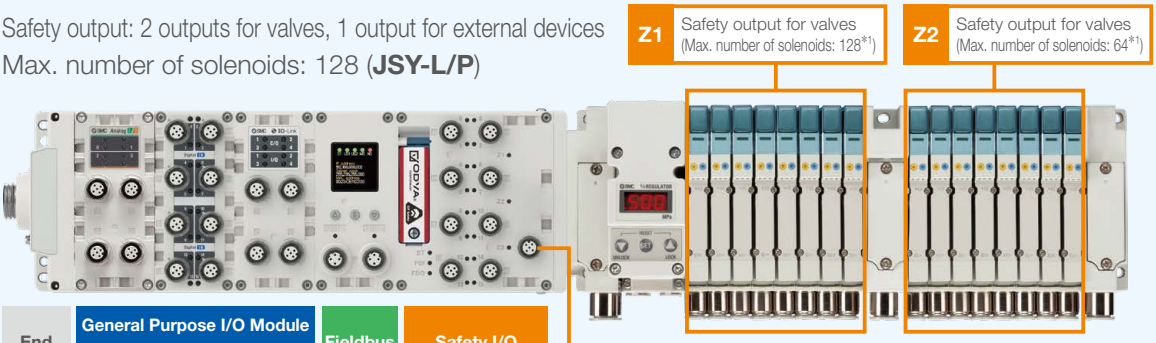

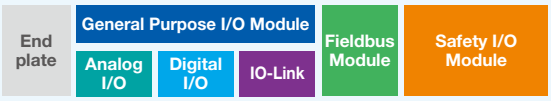

*1 The max. number of solenoids depends on the power consumption of the valve solenoids operating simultaneously.
* The max. number of solenoids per manifold is 128.
* To allow for valve manifold zone control, an intermediate SUP/EXH block assembly is required between each zone.

Block diagram

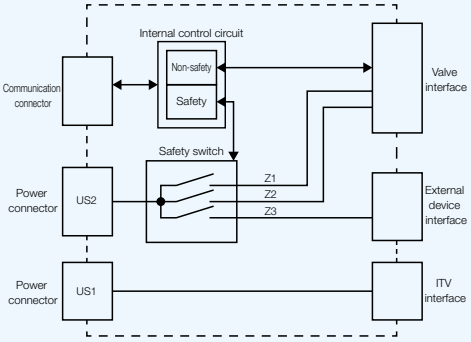

US1: Power supply for control/input
US2: Power supply for drive

Connectable Solenoid Valve/Electro-Pneumatic Regulator Series

Series		Max. number of solenoids	Max. number of electro-pneumatic regulators
IP67 *1	**JSY1000-L, JSY3000-L**	128	Not compatible
IP65	**JSY3000-P***2	128	4
IP65	**IITV23**	Not compatible	4

*1 JSY1000 is IP40.
*2 For the JSY-P type with a built-in electro-pneumatic regulator, only valve size 3000 can be selected.
* Valve specifications are the same as the JSY series.

Safety Input

Features

Up to 16 Safety Input compatible devices can be connected, such as residual pressure exhaust valve and other main valve position detection devices, and laser curtains.
The safety input can be obtained in 2 ways:

Single Input (1oo1): 16 Safety Inputs (SIL2, PL d)
Dual Input (1oo2): 8 Safety Inputs (SIL3, PL e)

Safety Input Definition
The safe state of the EX600-FV☐ is when the safety input value is sent to the upper level device (such as a safety PLC) as "0."
The safety functions and safety states of devices, including peripheral circuits, connected to this product are not within the scope of application of this product.

Block diagram

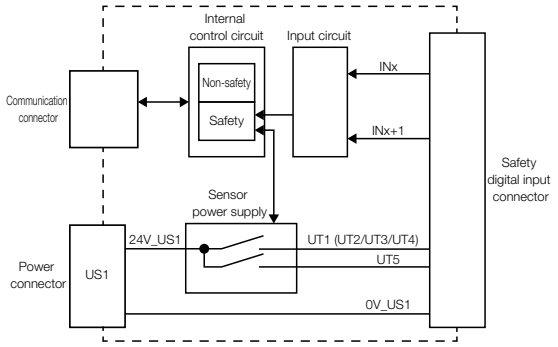

US1: Power supply for control/Input

Improving the efficiency of equipment startup and maintenance work

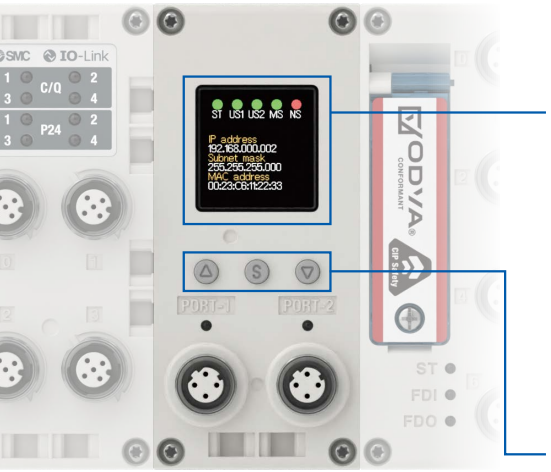

Fieldbus module

The LCD display allows for the current settings and diagnostic status to be checked and monitored.

Display

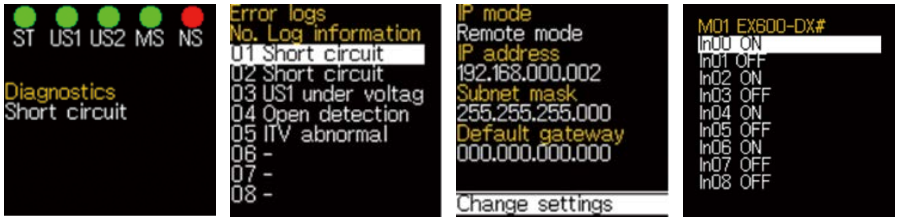

Status | Error logs | IP address/parameter setting*1 | ON/OFF monitoring

Operation buttons

*1 Only the EX600-BEN1 allows for IP address and parameter setting.

Simplified layout and reduced wiring

No need for a Safety Input/Output unit (commercially available)

Example of using Safety communication compatible Fieldbus devices

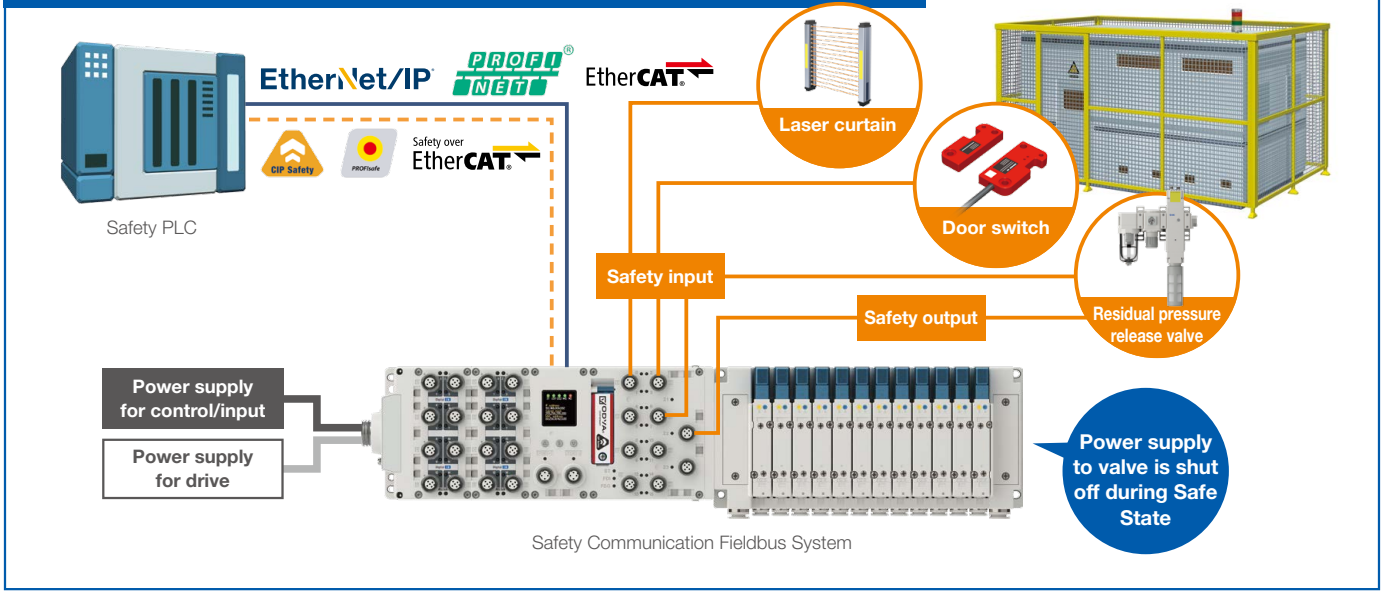

Example of NOT using Safety compatible Fieldbus devices

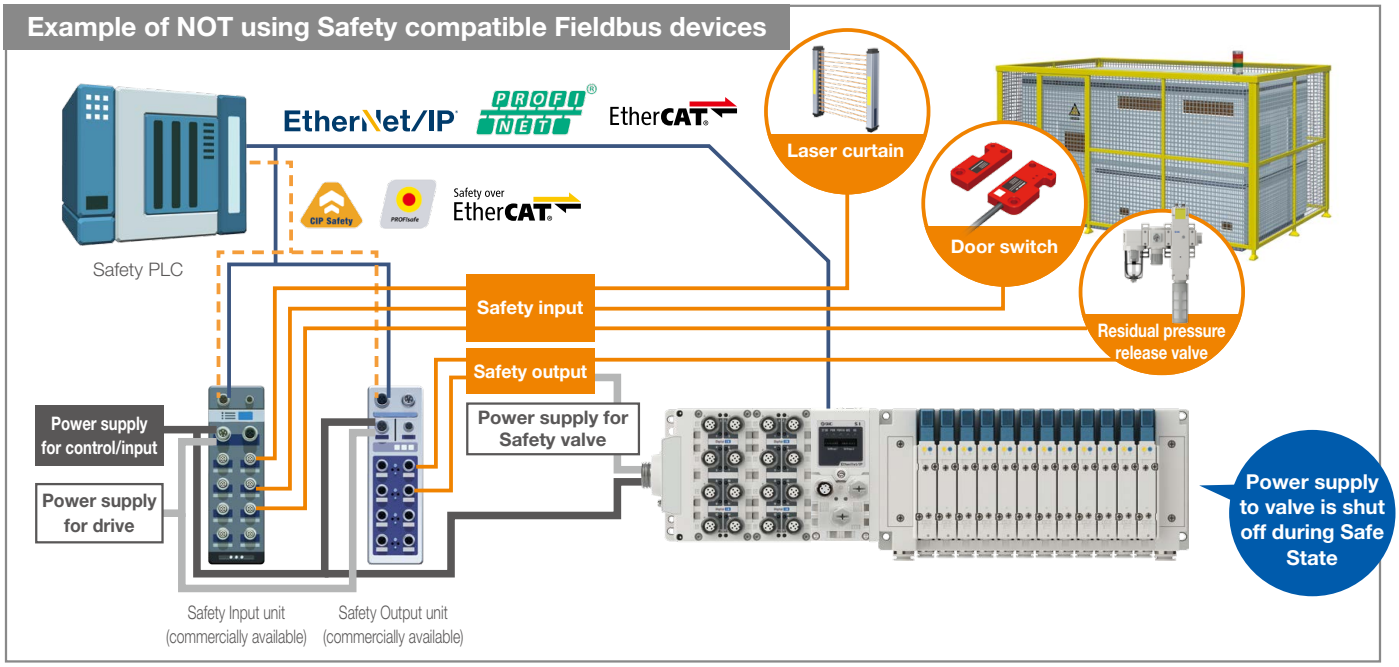

Safety of the machine or system

The manufacturer of the device/installation and the user are responsible for the safety of the device/installation. The use of the EX600-FV□ requires a safety concept of the device/installation, validation of safety functions and hazard/risk analysis in accordance with the corresponding directives and standards.

The target SIL (compliant with IEC 61508 / IEC 62061) and performance level/category (compliant with ISO 13849) are determined based on the risk analysis. For more information, refer to the "Safety of the Machine or System" section in the EX600-FV□ Operation manual.

Valve manifold zone control compatible

- Multiple zones can be controlled by a single manifold.
- Zone combinations (number of zones, number of solenoids, etc.) can be adjusted as needed depending on the application.

Example of using Safety communication compatible Fieldbus devices

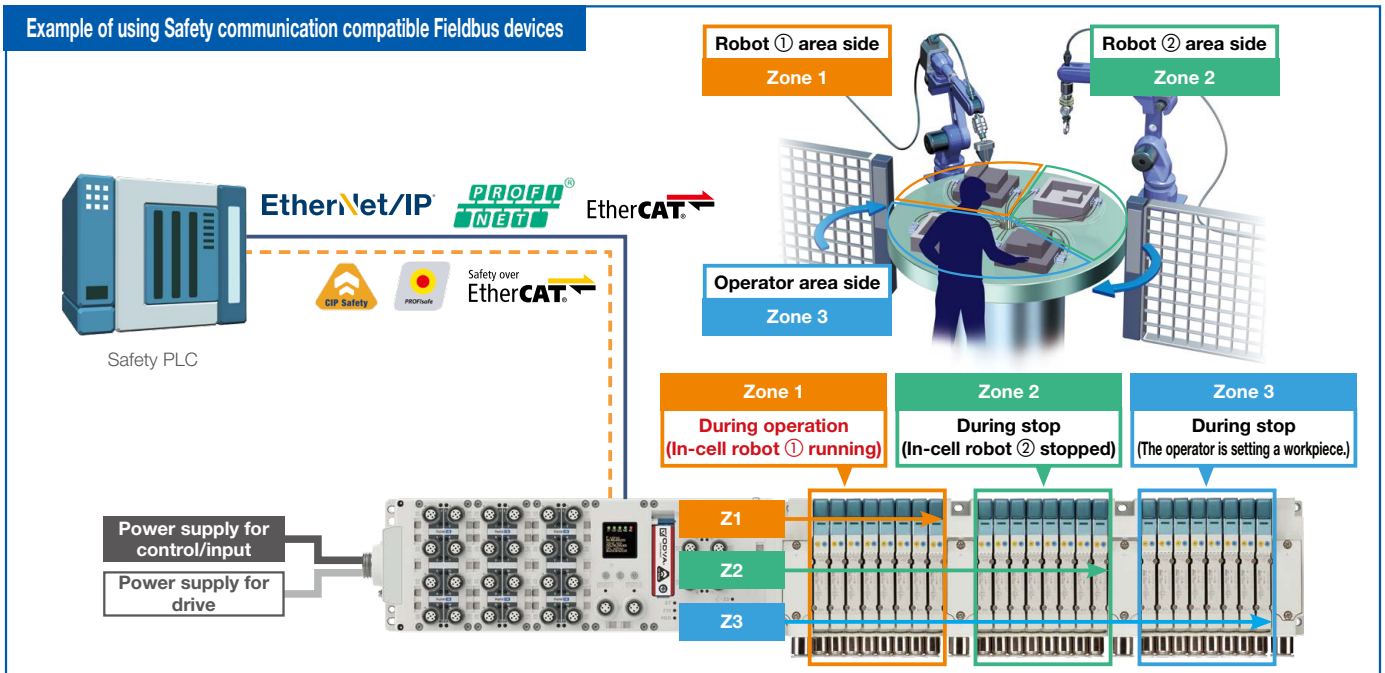

* The max. number of solenoids depends on the power consumption of the valve solenoids operating simultaneously.
* The image above shows the EX600-FV□3.
* To allow for valve manifold zone control, an intermediate SUP/EXH block assembly is required between each zone.

Example of NOT using Safety compatible Fieldbus devices

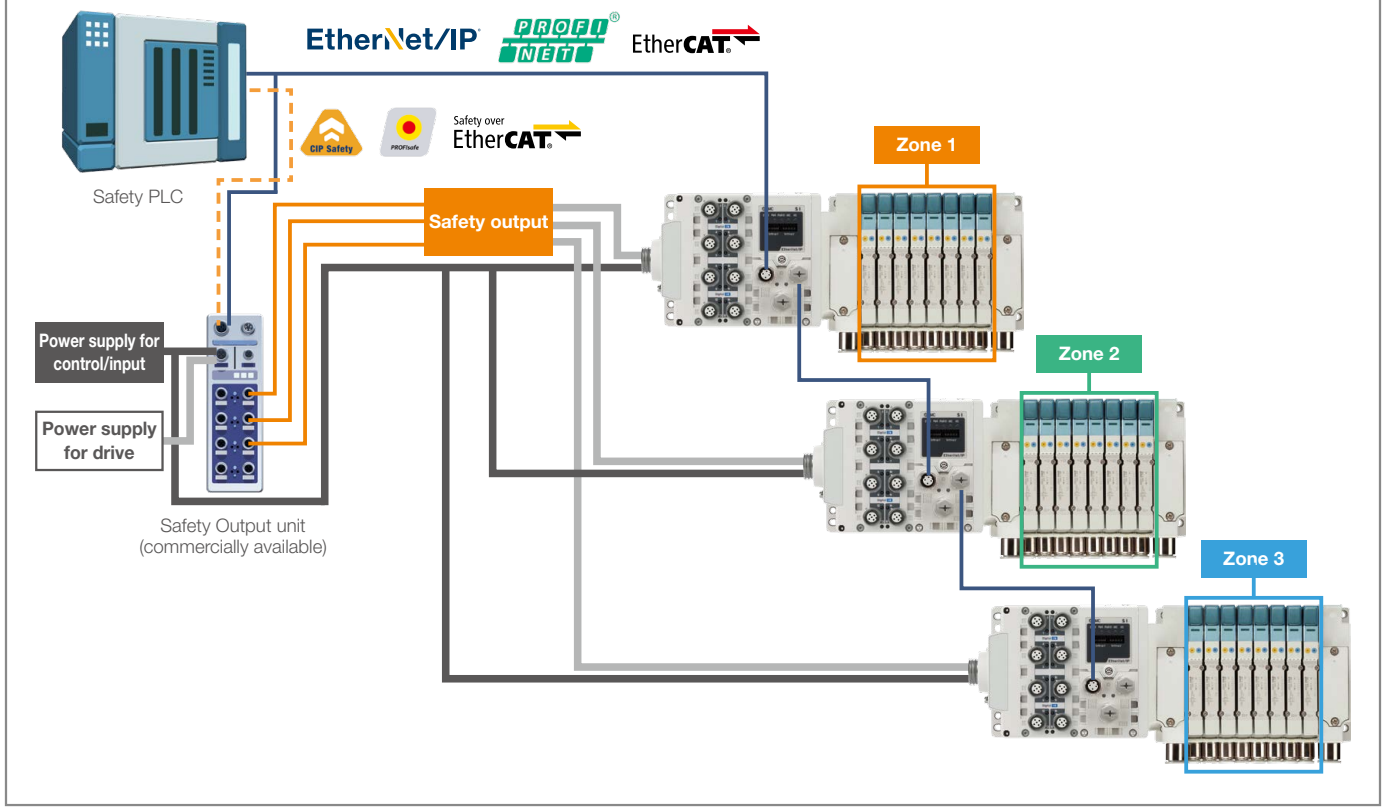

CONTENTS

Type 3 Integrated input-output type

Fieldbus System (For Input/Output)
EX600 Series

Configuration Diagram ..... p. 10

How to Order

- Fieldbus Module ..... p. 10
- Safety I/O Module ..... p. 10
- General Purpose I/O Module ..... p. 11
- End Plate ..... p. 11

Specifications

- Common Specifications ..... p. 12
- Fieldbus Module ..... p. 12
- Safety I/O Module ..... p. 12
- Digital Input Module ..... p. 13
- Digital Output Module ..... p. 13
- Analog Output/Analog I/O Module ..... p. 14
- IO-Link Module ..... p. 15
- End Plate ..... p. 15

Dimensions ..... p. 16

Parts Description ..... p. 22

Accessories

- ❶ End Plate Bracket ..... p. 25
- ❷ Valve Plate ..... p. 25
- ❸ End Plate (U side) ..... p. 26
- ❹ Reinforcing Brace ..... p. 26
- ❺ Seal Cap (10 pcs.) ..... p. 26
- ❻ Marker (1 sheet, 88 pcs.) ..... p. 26
- ❼ Power Supply Cable (7/8 inch connector) ..... p. 27
- ❽ Power Supply Field-wireable Connector (7/8 inch) ..... p. 27
- ❾ Communication Cable ..... p. 27
- ❿ Field-wireable Communication Connector ..... p. 29
- ⓫ I/O Cable with Connector, I/O Connector ..... p. 29
- ⓬ IO-Link Device Tool License Key ..... p. 30

Specific Product Precautions ..... p. 31

Safety Communication Fieldbus System

EX600 Series

IP67

Configuration Diagram

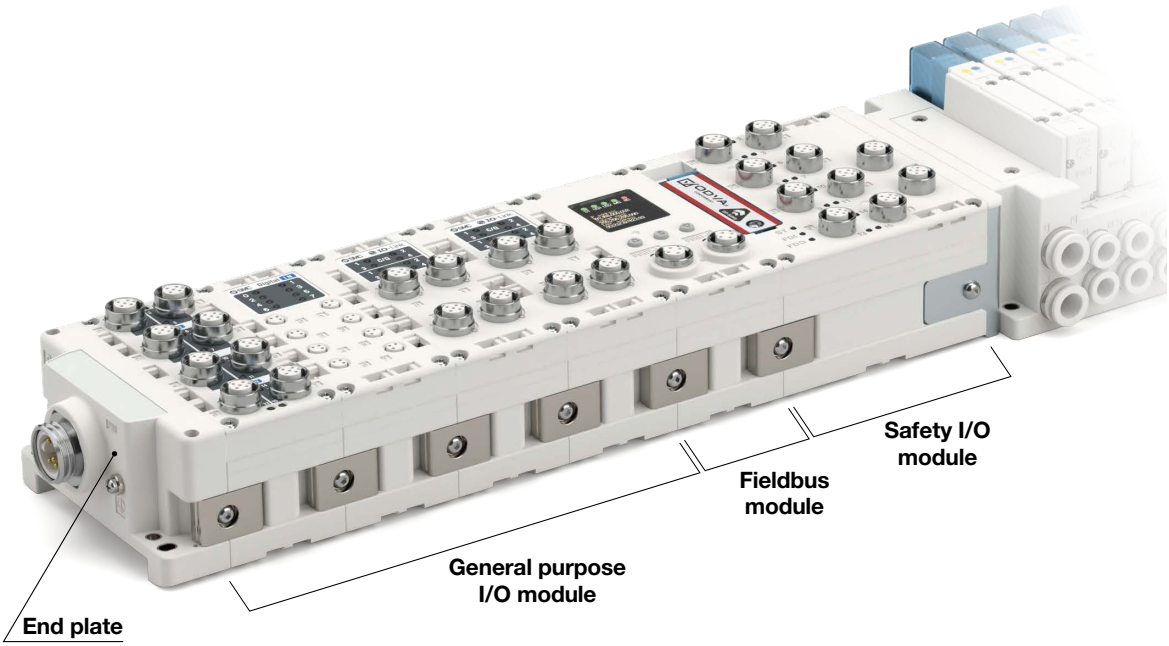

How to Order

Fieldbus Module

EX600 – B EN 1

Symbol	Protocol
EN	EtherNet/IP™
PN	PROFINET
EC	EtherCAT®

∗ 1 seal cap (for an M12 connector) is included with the product.

Safety I/O Module

EX600 – FV C 1

Symbol	Protocol
C	CIP Safety™
P	PROFIsafe
F	FSoE

Symbol	Number of safety inputs	Number of safety outputs	For external devices	Number of general purpose outputs	
		For valves		Max. number of solenoids	Connectable series
1	16	1	2	32	JSY, SY, VQC
2	16	1	2	128∗1	JSY-L/P, IITV23
3	16	3	—	128∗1	JSY-L∗2
4	16	2	1	128∗1	JSY-L/P, IITV23∗2

∗1 The max. number of solenoids depends on the power consumption of the valve solenoids operating simultaneously.
∗2 To allow for valve manifold zone control, an intermediate SUP/EXH block assembly is required between each zone.
∗ There is no seal cap included with the product.
However, a seal cap should be mounted on any unused connectors.

How to Order

General Purpose I/O Module

EX600 – DXPD – A

∗ Hexagon socket head cap screw

Digital input module

Digital output module

IO-Link module

Analog I/O module

Symbol	Module type	Function	Connector
DXPD	Digital input	Number of inputs: 16	M12 connector (5 pins) 8 pcs.
DXPC	Digital input	Number of inputs: 8	M8 connector (3 pins) 8 pcs.
DYPB	Digital output	Number of outputs: 8	M12 connector (5 pins) 4 pcs.
LAB1	IO-Link module class A	Number of ports: 4	M12 connector (5 pins) 4 pcs.
LBB1	IO-Link module class B	Number of ports: 4	M12 connector (5 pins) 4 pcs.
AYA	Analog output	Number of output channels: 2	M12 connector (5 pins) 2 pcs.
AMB	Analog I/O	Number of input channels: 2 Number of output channels: 2	M12 connector (5 pins) 4 pcs.

∗ There is no seal cap included with the product.
However, a seal cap should be mounted on any unused connectors.
∗ The general-purpose input/output module EX600-□-A has been changed to screw with hexagon socket with the joint bracket.
∗ The analog module is compatible with the EX600-BPN1 and the EX600-BEC1.

End Plate (D side)

EX600 – ED 3 – 2

For 7/8 inch

Symbol	Power supply connector
3	7/8 inch (5 pins)

Symbol	Description	Note
Nil	Without DIN rail mounting bracket	–
2	With DIN rail mounting bracket	For VQC series
3	With DIN rail mounting bracket	For SY and JSY series

End Plate (U side)

EX600 – E U 1 – 2 – A

∗ The end plate is for use when the valve manifold is not connected.
∗ Can only be connected to the EX600-FV□1

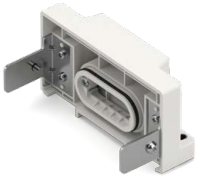

End plate

End plate mounting position: U side

Specifications

Symbol	Specifications
1	Waterproof cover

Mounting method

Symbol	Description	Note
Nil	Without DIN rail mounting bracket	–
2	With DIN rail mounting bracket	For EX600-ED□-2
3	With DIN rail mounting bracket	For EX600-ED□-3

∗ Select the same mounting method symbol for the end plate (D side).

Included parts

Symbol	Included parts
A	Hexagon socket head cap screw (M4 x 6) 2 pcs.

Specifications

Common Specifications

Electrical	US1 (power supply for control/input) power supply voltage range	24 VDC +20%, –15%
	US2 (power supply for drive) power supply voltage range	24 VDC +20%, –15%
Environmental	Operating temperature range	–10 to +50°C
	Storage temperature range	–20 to +60°C
	Operating humidity range	35 to 85%RH (No condensation)
	Withstand voltage	500 VAC for 1 minute between external terminals and FE
	Insulation resistance	500 VDC, 10 MΩ or more between external terminals and FE
Standards		CE/UKCA, UL (CSA)

Fieldbus Module

EX600-B□□1

Model		EX600-BEN1	EX600-BPN1	EX600-BEC1
Communication	**Protocol**	EtherNet/IP™ (Conformance test revision: CT21)	PROFINET (Conformance Class C)	EtherCAT® (Conformance test Record V.2.7.0)
	Communication speed	10/100 Mbps	100 Mbps	100 Mbps
	Configuration file	EDS file*1	GSDML file*1	XML file*1
	Applicable function	QuickConnect™*2 DLR	Fast Start Up*3 MRP System Redundancy S2	–
Number of connectable I/O modules		General purpose I/O module: 9 modules Safety I/O module: 1 module		
Internal current consumption		150 mA max. (US1)		
Enclosure rating		IP65/IP67*4		
Weight		310 g		

*1 The configuration file can be downloaded from the SMC website: **https://www.smcworld.com**
*2 It is invalid when connected to EX600-FVC□.
*3 Approx. 1 s when the EX600-FVP□ is connected.
*4 It depends on IP on manifold when connected to manifold.

Safety I/O Module

EX600-FV□1/2/3/4

Model		EX600-FV□1	EX600-FV□2	EX600-FV□3	EX600-FV□4
Protocol		□ = C: CIP Safety™ □ = P: PROFIsafe □ = F: Safety over EtherCAT®			
Input/Output type		PNP			
Input	**Number of safety inputs**	16 inputs			
	Power source	US1 (Power supply for control/input)			
	Max. supply current	2 A/module, 0.6 A/UT			
	Protection	Short-circuit protection			
	ON voltage	11 V to 30 V			
	OFF voltage	–3 V to 5 V			
	Input current	Typ. 3.6 mA			
	Voltage drop	1.2 V max.			
Output	**Number of valve outputs**	32 outputs	128 outputs max.*1		
	Manifold electro-pneumatic regulator	–	4 stations max.	–	4 stations max.
	Number of safety outputs	For valves: 1 output For external devices: 2 outputs		For valves: 3 outputs	For valves: 2 outputs For external devices: 1 output
	Power source	US2 (Power supply for drive)			
	Max. load current	2.5 A/module For valves - Z1: 2 A For external devices - Z2/3: 0.25 A each		2.5 A/module For valves - Z1: 2 A - Z2/3: 1 A each	2.5 A/module For valves - Z1: 2 A - Z2: 1 A For external devices - Z3: 0.25 A
	Protection	Short-circuit protection			
	Voltage drop	1.2 V max.			
Internal current consumption		150 mA max.			
Enclosure rating		IP65/67*2			
Weight		540 g			

*1 The max. number of solenoids depends on the power consumption of the valve solenoids operating simultaneously.
*2 It depends on IP on manifold when connected to manifold.

Specifications

EX600-DXPC-A

EX600-DXPD-A

Digital Input Module

Model		EX600-DXPC-A	EX600-DXPD-A
Input	Input type	PNP	
	Input connector	M8 (3-pin) socket*2	M12 (5-pin) socket*1
	Number of inputs	8 inputs (1 input/connector)	16 inputs (2 inputs/connector)
	Power source	US1 (Power supply for control/input)	
	Max. supply current	2 A/module 0.25 A/connector	2 A/module 0.5 A/connector
	Protection	Short-circuit protection	
	Input current	Typ. 8.7 mA	
	ON voltage	17 V or more	
	OFF voltage	5 V or less	
Current consumption		55 mA max. (US1)	70 mA max. (US1)
Enclosure rating		IP67*3	
Weight		275 g	340 g

*1 M12 (4-pin) connector can be connected.
*2 When connecting the M8 plug connector, the tightening torque should be 0.2 N·m ±10%. Tightening with excessive torque may damage the connector threads of the module.
*3 It depends on IP on manifold when connected to manifold.

EX600-DYPB-A

Digital Output Module

Model		EX600-DYPB-A
Output	Output type	PNP
	Output connector	M12 (5-pin) socket*1
	Number of outputs	8 outputs (2 outputs/connector)
	Power source	US2 (Power supply for drive)
	Max. load current	2 A/module 0.5 A/output
	Protection	Short-circuit protection
Current consumption		50 mA max. (US1)
Enclosure rating		IP67*2
Weight		300 g

*1 M12 (4-pin) connector can be connected.
*2 It depends on IP on manifold when connected to manifold.

Specifications

EX600-AYA-A

EX600-AMB-A

Analog Output/Analog I/O Module

	Model	EX600-AYA-A		EX600-AMB-A	
Input	**Input type**	–		Voltage	Current
	Input connector			M12 (5-pin) socket*1	
	Number of inputs			2 inputs (1 input/connector)	
	Power source			US1 (Power supply for control/input)	
	Max. supply current			0.5 A/connector	
	Protection			Short-circuit protection	
	Input signal range (12 bit resolution)			0 to 10 V, 1 to 5 V, 0 to 5 V	0 to 20 mA, 4 to 20 mA
	Max. rated input signal			15 V	22 mA*2
	Input impedance			100 kΩ	250 Ω
	Linearity (25°C)			±0.05% F.S.	
	Repeatability (25°C)			±0.15% F.S.	
	Absolute accuracy (25°C)			±0.5% F.S.	±0.6% F.S.
Output	**Output type**	Voltage	Current	Voltage	Current
	Output connector	M12 (5-pin) socket*1			
	Number of outputs	2 outputs (1 output/connector)			
	Power source	US2 (Power supply for drive)			
	Max. supply current	0.5 A/connector (Pin no. 1)			
	Protection	Short-circuit protection			
	Output signal range (12 bit resolution)	0 to 10 V, 1 to 5 V, 0 to 5 V	0 to 20 mA, 4 to 20 mA	0 to 10 V, 1 to 5 V, 0 to 5 V	0 to 20 mA, 4 to 20 mA
	Load impedance	1 kΩ or more	600 Ω or less	1 kΩ or more	600 Ω or less
	Linearity (25°C)	±0.05% F.S.		±0.05% F.S.	
	Repeatability (25°C)	±0.15% F.S.		±0.15% F.S.	
	Absolute accuracy (25°C)	±0.5% F.S.	±0.6% F.S.	±0.5% F.S.	±0.6% F.S.
	Current consumption	70 mA max. (US1)		100 mA max. (US1)	
	Enclosure rating	IP67*3			
	Weight	290 g		300 g	

*1 M12 (4-pin) connector can be connected.
*2 When the input signal exceeds the max. rating, the protection function is activated, and the input signal is interrupted.
*3 It depends on IP on manifold when connected to manifold.

Specifications

EX600-L□B1-A

IO-Link Module

Model		EX600-LAB1-A	EX600-LBB1-A
IO-Link version		Version 1.1	
IO-Link port class		Class A	Class B
Communication speed		COM1 (4.8 kbps) COM2 (38.4 kbps) COM3 (230.4 kbps) ∗ Changes automatically according to the connected device	
Number of IO-Link ports		4	
IO-Link connector		M12 (5-pin) socket∗1	
Max. supply current	Device power supply (L+)	2 A/module 0.5 A/connector	1 A/module 0.5 A/connector
	External power supply (P24)	–	3 A/module 1.6 A/connector
Input	Input type	PNP	
	Power source	US1 (Power supply for control/input)	
	Input current	Pin no. 2: Typ. 2.5 mA Pin no. 4: Typ. 5.8 mA	Pin no. 4: Typ. 5.8 mA
	ON voltage	13 V or more	
	OFF voltage	8 V or less	
	Protection	Short-circuit protection	
Output	Output type	PNP	
	Power source	US1 (Power supply for control/input)	
	Max. load current (C/Q line)	Pin no. 4: 0.25 A/output	
	Protection	Short-circuit protection	
Current consumption		50 mA max.	
Enclosure rating		IP67∗2	
Weight		320 g	

∗1 M12 (4-pin) connector can be connected.
∗2 It depends on IP on manifold when connected to manifold.

EX600-ED3-□

End Plate

Model			EX600-ED3-□
Electrical	Power supply connector	PWR IN	7/8 inch (5-pin) plug
		PWR OUT	–
	Rated voltage	US1 (power supply for control/input)	8 A max.
		US2 (power supply for drive)	8 A max.
Enclosure rating			IP67∗1
Weight			175 g

∗1 It depends on IP on manifold when connected to manifold.

Dimensions

Fieldbus Module

EX600-B□□1

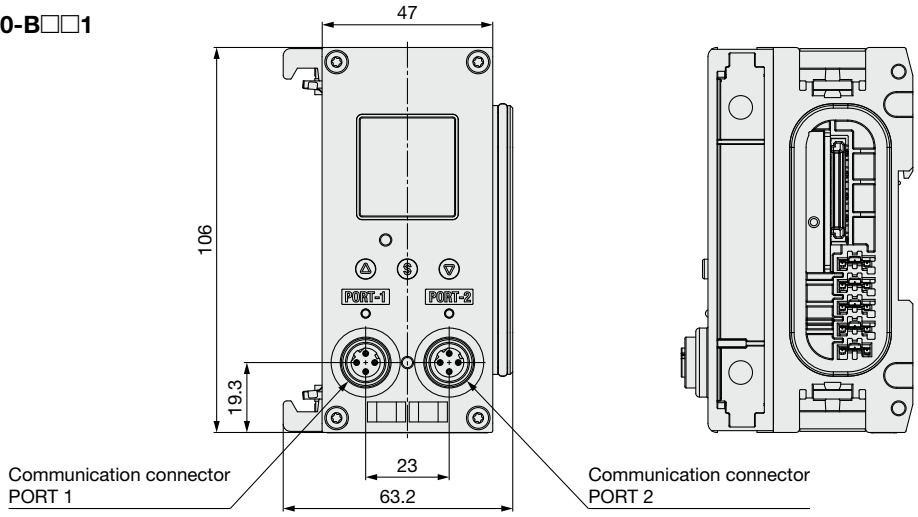

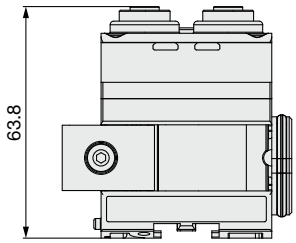

Communication connector PORT 1/2: M12 4-pin D-coded socket

Configuration	Pin no.	Signal description
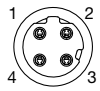	**1**	TX+
	2	RX+
	3	TX–
	4	RX–

Safety I/O Module

EX600-FV□1
EX600-FV□2

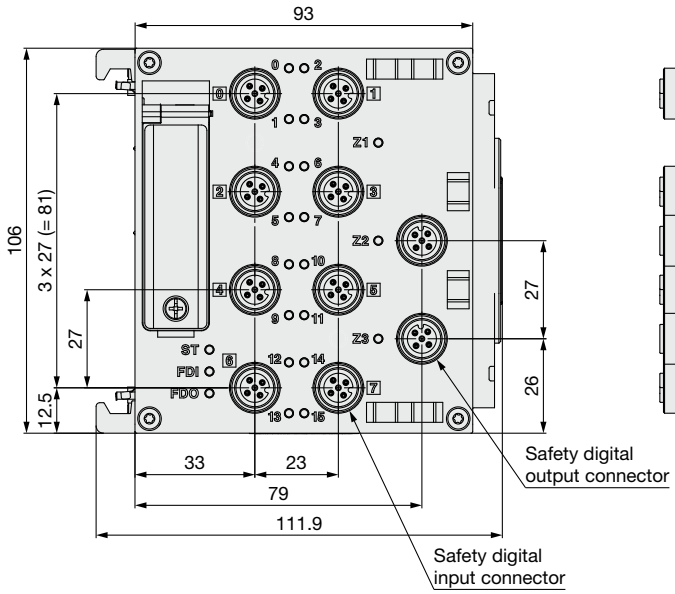

EX600-FV□1

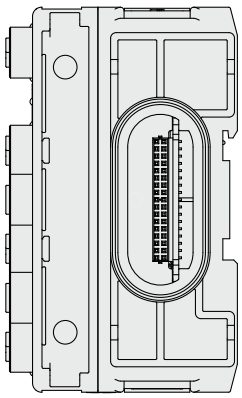

EX600-FV□2

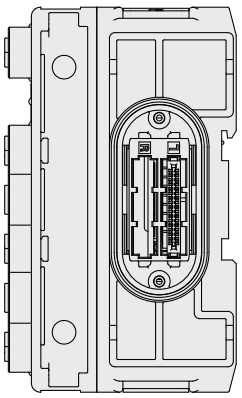

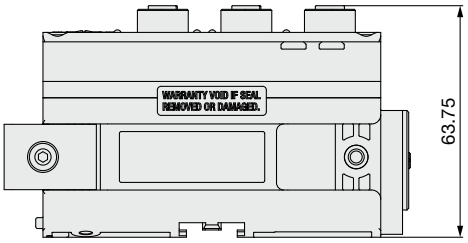

Safety digital input connector: M12 A-coded socket

Configuration	Pin no.	Signal description			
		CN0/1	CN2/3	CN4/5	CN6/7
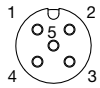	**1**	UT1	UT2	UT3	UT4
	2	IN n + 1*1			
	3	0V_US1			
	4	IN n*1			
	5	UT5			

*1 The “n” indicates connector number “x 2.”

Safety digital output connector: M12 A-coded socket

Configuration	Pin no.	Signal description	
		Z2	Z3
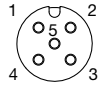	**1**	N.C.	
	2	N.C.	
	3	Safety output (0 V)	
	4	Safety output 2 (24 V)	Safety output 3 (24 V)
	5	FE	

Dimensions

Safety I/O Module

EX600-FV□3
EX600-FV□4

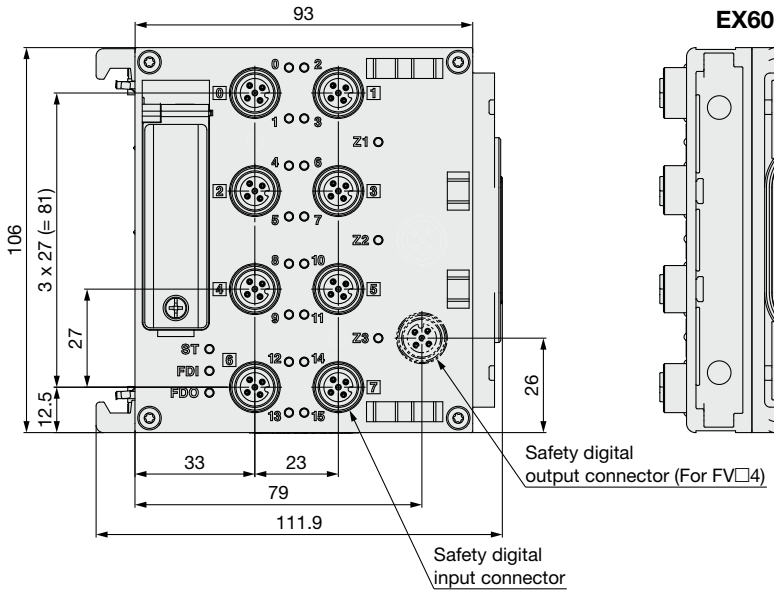

EX600-FV□3

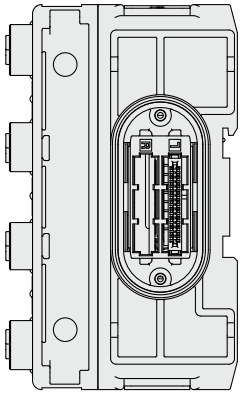

EX600-FV□4

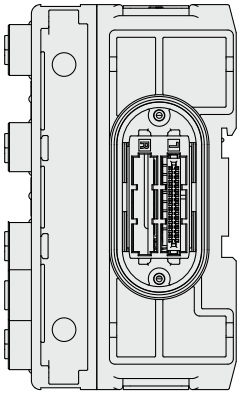

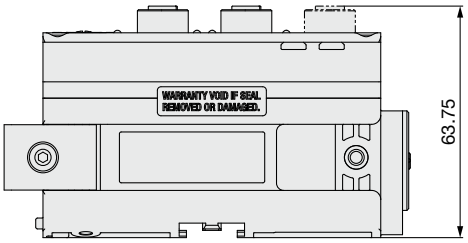

Safety digital input connector: M12 A-coded socket

Configuration	Pin no.	Signal description			
		CN0/1	CN2/3	CN4/5	CN6/7
	1	UT1	UT2	UT3	UT4
	2	IN n + 1*1			
	3	0V_US1			
	4	IN n*1			
	5	UT5			

*1 The “n” indicates connector number “x 2.”

Safety digital output connector: M12 A-coded socket

Configuration	Pin no.	Signal description
		Z3
	1	N.C.
	2	N.C.
	3	Safety output (0 V)
	4	Safety output 3 (24 V)
	5	FE

* The Z3 safety digital output connector is not a part of the EX600-FV□3.

Dimensions

Digital Input Module

EX600-DXPC-A

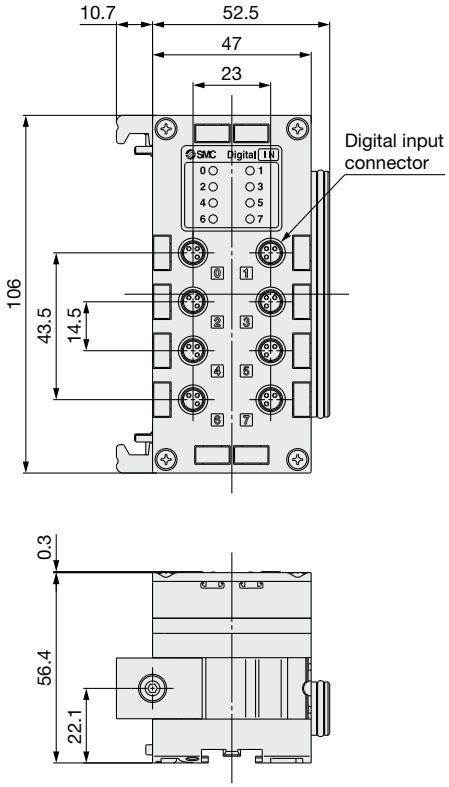

EX600-DXPD-A

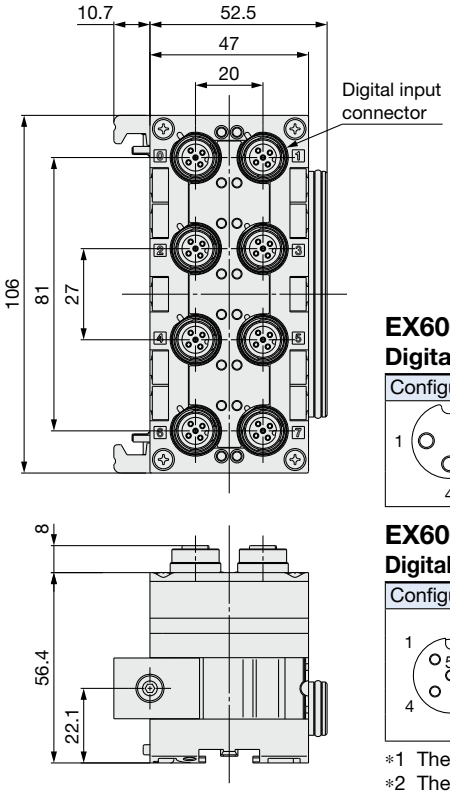

EX600-DXPC-A
Digital input connector: M8 3-pin socket

Configuration	Pin no.	Signal description
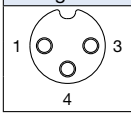	**1**	24 V (US1)
	3	0 V (US1)
	4	Input N*1

EX600-DXPD-A
Digital input connector: M12 5-pin A-coded socket

Configuration	Pin no.	Signal description
	1	24 V (US1)
	2	Input n + 1*2
	3	0 V (US1)
	4	Input n*2
	5	FE

*1 The "N" indicates the connector number.
*2 The "n" indicates connector number "x 2."
* M12 (4-pin) connector can be connected.

Digital Output Module

EX600-DYPB-A

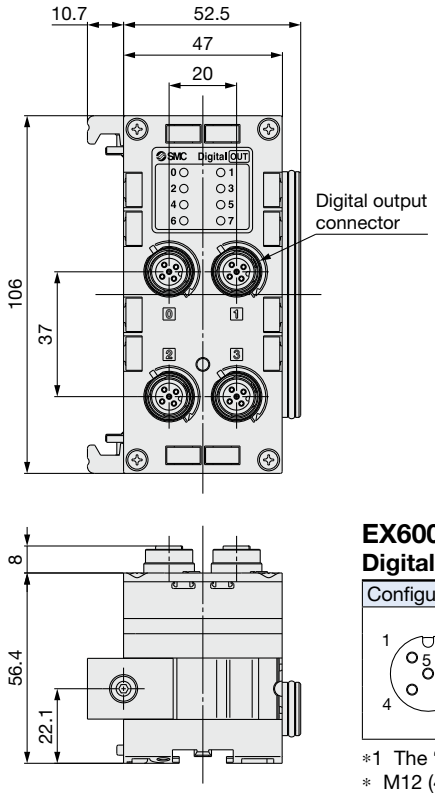

EX600-DYPB-A
Digital output connector: M12 5-pin A-coded socket

Configuration	Pin no.	Signal description
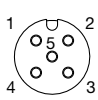	**1**	N.C.
	2	Output n + 1*1
	3	0 V (US2)
	4	Output n*1
	5	FE

*1 The "n" indicates connector number "x 2."
* M12 (4-pin) connector can be connected.

Dimensions

Analog Module

EX600-AYA-A

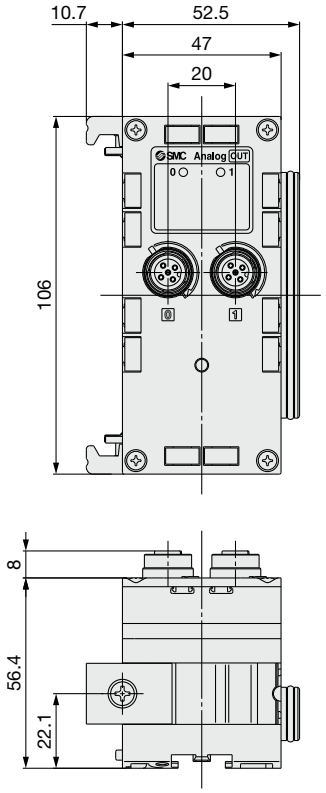

EX600-AMB-A

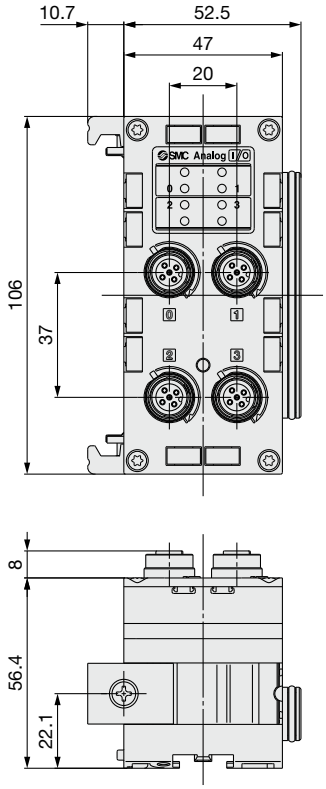

EX600-AYA-A

Configuration	Pin no.	Signal description
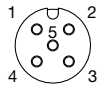	**1**	24 V (US2)
	2	Output N*1
	3	0 V (US2)
	4	0 V (US2)
	5	FE

EX600-AMB-A

Configuration	Pin no.	Signal description	
		For input	For output
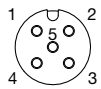	**1**	24 V (US1)	24 V (US2)
	2	Input N (+)*1	Output N*1
	3	0 V (US1)	0 V (US2)
	4	Input N (–)*1	0 V (US2)
	5	FE	FE

*1 The “N” indicates the connector number.

Dimensions

IO-Link Module

EX600-LAB1-A
EX600-LBB1-A

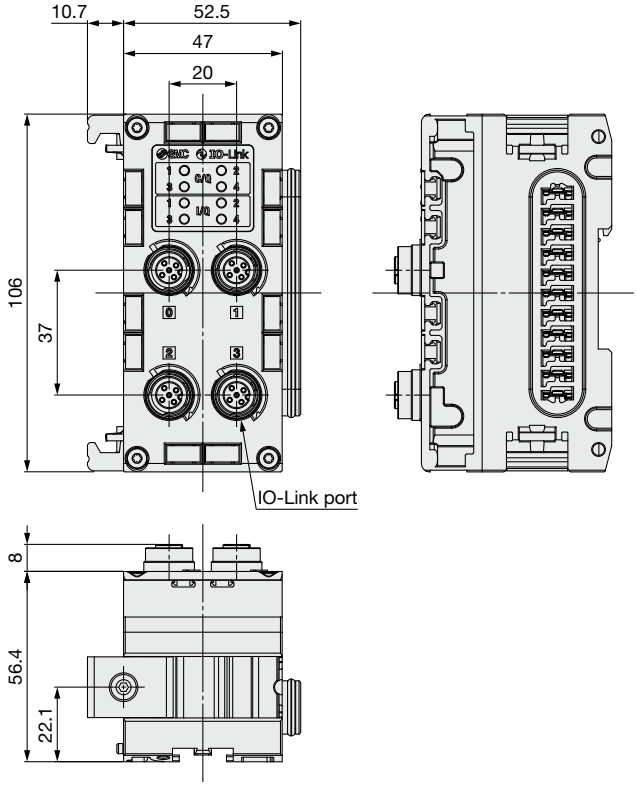

EX600-LAB1-A
IO-Link port: M12 5-pin A-coded socket

Configuration	Pin no.	Signal description	Description
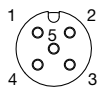	**1**	L+	24 V (US1)
	2	I/Q	Digital Input (PNP)
	3	L–	0 V (US1)
	4	C/Q	IO-Link communication / Digital input (PNP) / Digital output (PNP)*1
	5	N.C.	Not used

*1 This can be selected by parameters. The power supply system for digital output is for US1 (for control/input).

EX600-LBB1-A
IO-Link port: M12 5-pin A-coded socket

Configuration	Pin no.	Signal description	Description
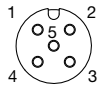	**1**	L+	24 V (US1)
	2	P24	24 V (US2)
	3	L–	0 V (US1)
	4	C/Q	IO-Link communication / Digital input (PNP) / Digital output (PNP)*1
	5	N24	0 V (US2)

*1 This can be selected by parameters. The power supply system for digital output is for US1 (for control/input).

End Plate (D side)

EX600-ED3

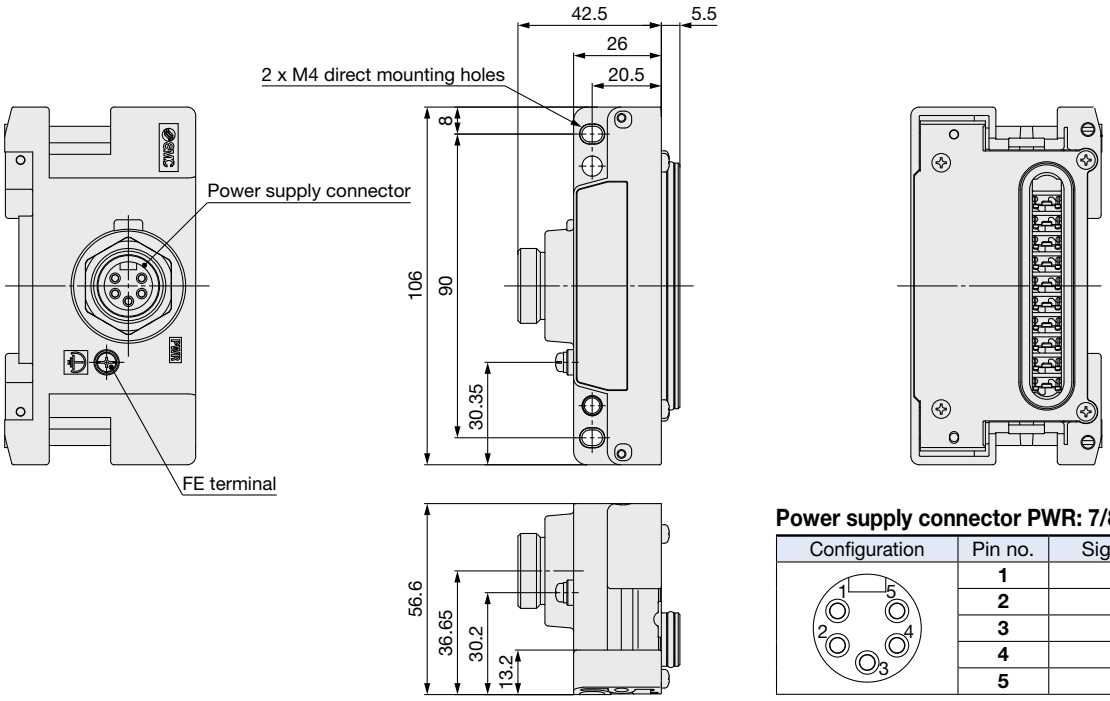

Power supply connector PWR: 7/8 inch 5-pin plug

Configuration	Pin no.	Signal description
	1	0 V (US2)
	2	0 V (US1)
	3	FE
	4	24 V (US1)
	5	24 V (US2)

Dimensions

End Plate (U side)

EX600-EU1-□-A

∗ Can only be connected to the EX600-FV□1

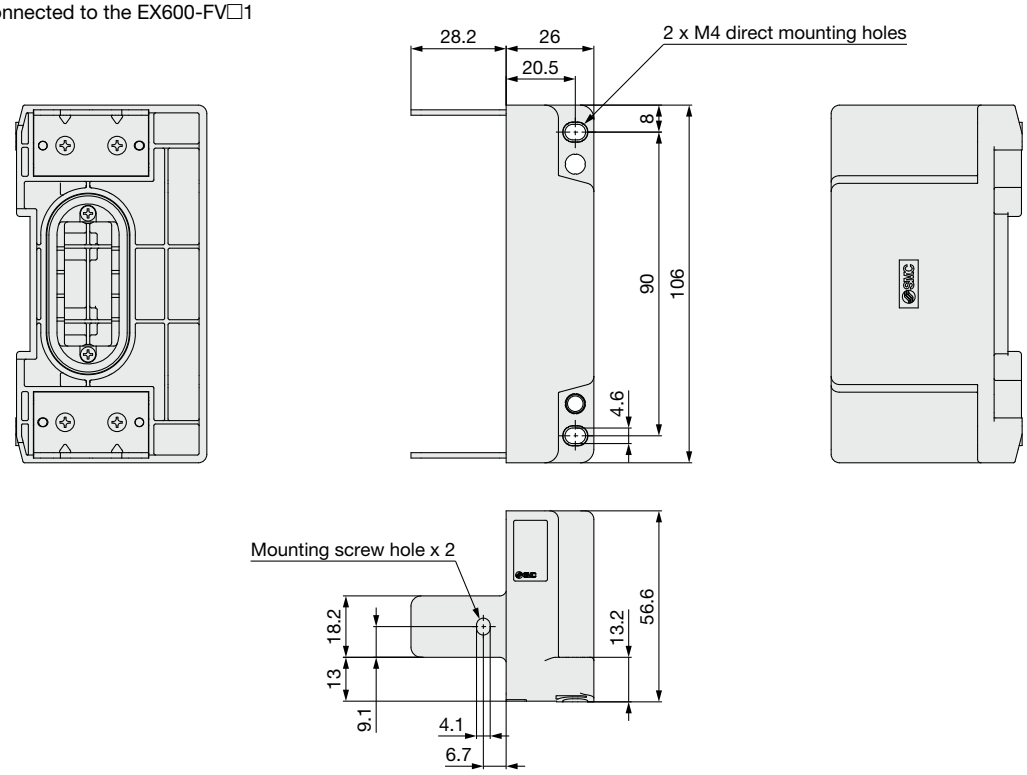

Parts Description

Fieldbus Module

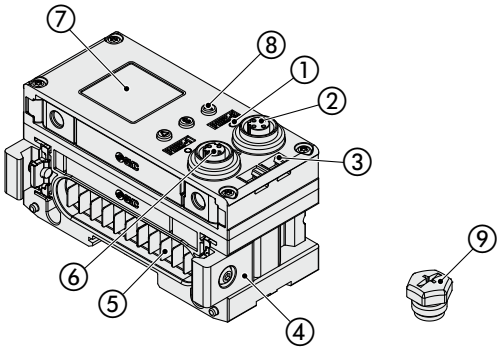

EX600-B□□1

No.	Name	Function
1	**Communication status LED**	Displays the communication status.
2	**Connector (PORT 2)**	Connection for communication cable
3	**Marker groove**	Can be used to mount a marker
4	**Joint bracket**	Connects the modules together
5	**Module connection connector (plug)**	Transmits signals and supplies power to adjacent modules.
6	**Connector (PORT 1)**	Connection for communication cable
7	**LCD display**	Displays the communication status.
8	**Push button switch**	Push button switch for configuring the LCD display.
9	**Seal cap**	Attached to the connector (PORT 2) at the time of shipment.

Safety I/O Module

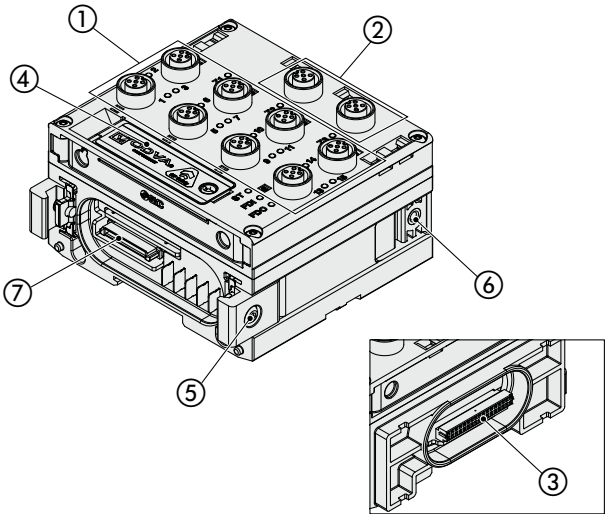

EX600-FV□1/2/3/4

No.	Name	Function
1	**Safety digital input connectors**	Connector for safety input devices.
2	**Safety digital output connectors (via M12 connector)**	Connector for safety output devices. (Not yet implemented for the FV□3)
3	**Valve connector**	Connector for valve manifold
4	**Switch cover**	Open for setting the switch (not used with EX600-FVC□).
5	**Joint bracket**	Connect the module together.
6	**Valve plate mounting screw holes**	For mounting the valve plate.
7	**Module connector**	Transmits signals and supplies power to adjacent module.

∗ The model shown on the left is the EX600-FVC1 (representative model).

Parts Description

Digital Module

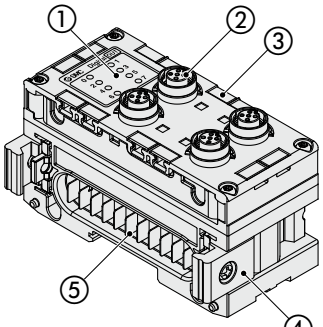

EX600-DYPB-A

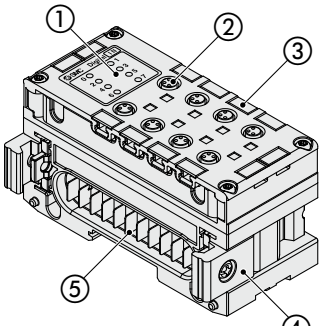

EX600-DXPC-A

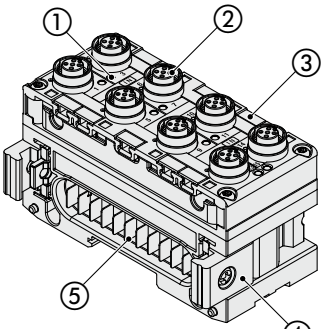

EX600-DXPD-A

No.	Name	Function
1	**Status indication LED**	Displays module status
2	**Connector**	Connects with input or output devices
3	**Marker groove**	Can be used to mount a marker
4	**Joint bracket**	Links modules to one another
5	**Connector for module (Plug)**	Transmits signals to the neighboring module and supplies power

Analog Module

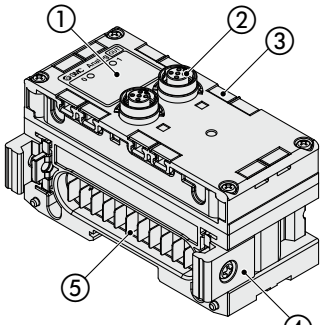

EX600-AYA-A

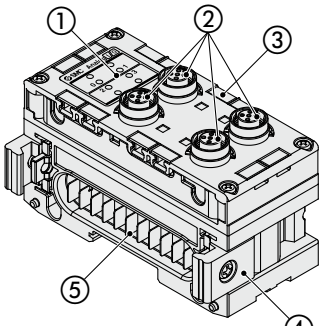

EX600-AMB-A

No.	Name	Function
1	**Status indication LED**	Displays module status
2	**Connector**	Connects with input or output devices
3	**Marker groove**	Can be used to mount a marker
4	**Joint bracket**	Links modules to one another
5	**Connector for module (Plug)**	Transmits signals to the neighboring module and supplies power

IO-Link Module

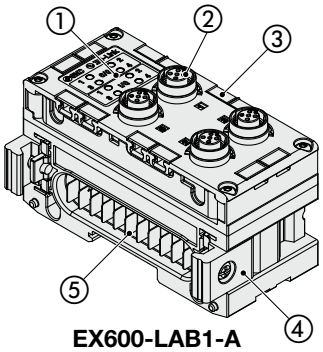

EX600-LAB1-A
EX600-LBB1-A

No.	Name	Function
1	**Status indication LED**	Displays module status
2	**Connector**	Connects with IO-Link, input, or output devices
3	**Marker groove**	Can be used to mount a marker
4	**Joint bracket**	Links modules to one another
5	**Connector for module (Plug)**	Transmits signals to the neighboring module and supplies power

Parts Description

End Plate (D side)

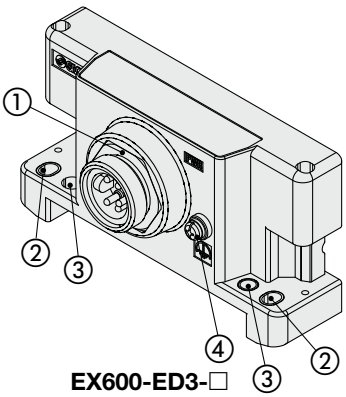

EX600-ED3-□

No.	Name	Function
1	**Power connector (PWR IN)**	Supplies power to the module and/or input/output device
2	**Fixing hole for direct mounting**	Connects directly to equipment
3	**Fixing hole for DIN rail**	Converts to manifold or for DIN rail mounting
4	**FE terminal**	Used for grounding Ground this terminal securely to improve noise immunity.

EX600 Series
Accessories

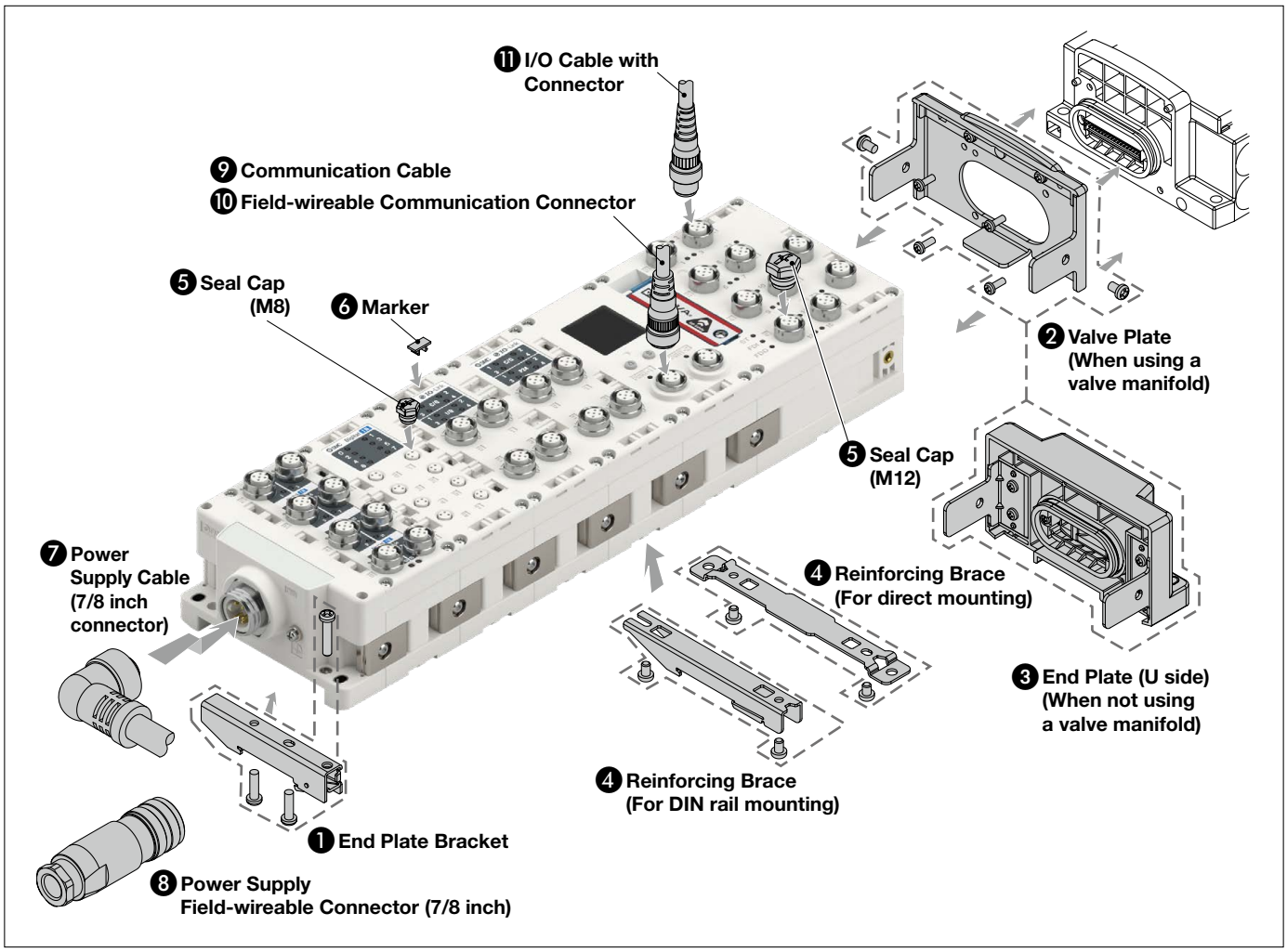

❶ End Plate Bracket

This bracket is used for the end plate for DIN rail mounting.

EX600-ZMA2
(For VQC series)

Included parts

Round head screw (M4 x 20)	1 pc.
P-tight screw (4 x 14)	2 pcs.

EX600-ZMA3
(For SY, JSY, JSY-L/P)

Included parts

Round head screw with washer (M4 x 20)	1 pc.
P-tight screw (4 x 14)	2 pcs.

❷ Valve Plate

EX600-ZMV1-A
(Special for VQC series)

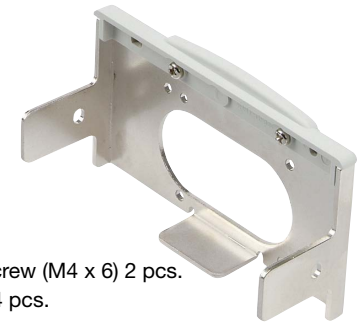

Included parts
Hexagon socket head cap screw (M4 x 6) 2 pcs.
Round head screw (M3 x 8) 4 pcs.

EX600-ZMV3-A
(For SY, JSY, JSY-L/P series)

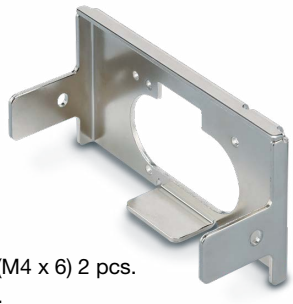

Included parts
Hexagon socket head cap screw (M4 x 6) 2 pcs.
Round head screw (M3 x 8) 2 pcs.

❸ End Plate (U side)

The end plate is for use when the manifold valve is not connected.
Can only be connected to the EX600-FV□1

EX600-EU1-□-A

Included parts

Symbol	Included parts
A	Hexagon socket head cap screw (M4 x 6) 2 pcs.

Mounting method

Symbol	Description	Note
Nil	Without DIN rail mounting bracket	—
2	With DIN rail mounting bracket	For EX600-ED□-2
3	With DIN rail mounting bracket	For EX600-ED□-3

∗ Select in accordance with the symbol for the end plate (D side) mounting method.

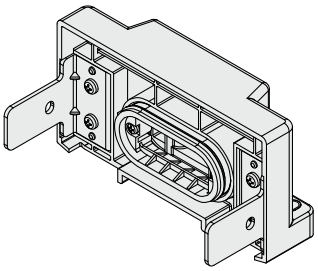

❹ Reinforcing Brace

This bracket is used on the bottom of the module at the intermediate position for connecting 5 modules or more.
∗ Be sure to attach this bracket to prevent connection failure between the modules caused by deflection.

For Direct mounting
EX600-ZMB1

Included parts
Round head screw (M4 x 5) 2 pcs.

For DIN rail mounting
EX600-ZMB2

Included parts
Round head screw (M4 x 6) 2 pcs.

❺ Seal Cap (10 pcs.)

Be sure to mount a seal cap on any unused I/O connectors.
Otherwise, the specified enclosure cannot be maintained.

EX9-AWES
For M8

EX9-AWTS
For M12

❻ Marker (1 sheet, 88 pcs.)

The signal name of I/O device and each module address can be entered and mounted on each module.

EX600-ZT1

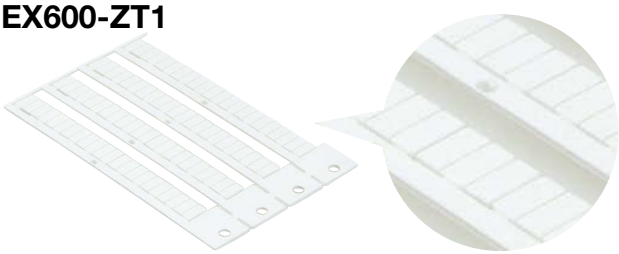

❼ Power Supply Cable (7/8 inch connector)

PCA-1558810	Straight 2 m
PCA-1558823	Straight 6 m
PCA-1558836	Right angled 2 m
PCA-1558849	Right angled 6 m

Straight connector type

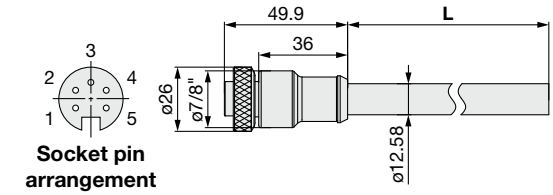

Socket pin arrangement

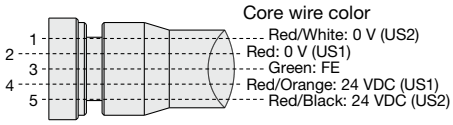

Connections

Angled connector type

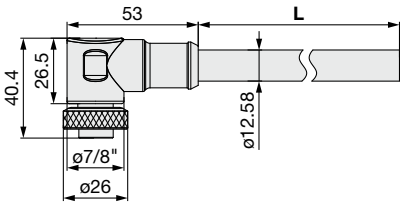

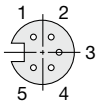

Socket pin arrangement

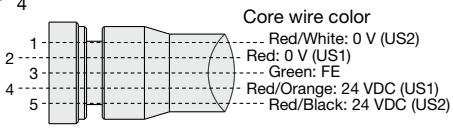

Connections

Item	Specifications
Cable O.D.	ø12.58 mm
Conductor nominal cross section	1.5 mm²/AWG16
Wire O.D. (Including insulator)	2.35 mm
Min. bending radius (Fixed)	110 mm

❽ Power Supply Field-wireable Connector (7/8 inch)

PCA-1578081 Socket [compatible with AWG22-16]

Applicable Cable

Item	Specifications
Cable O.D.	ø12.0 to 14.0 mm
Wire gauge (Stranded wire cross section)	0.34 to 1.5 mm² AWG22 to 16

❾ Communication Cable

For EtherCAT® **For PROFINET** **For EtherNet/IP™**

EX9-AC 020 EN-PSRJ (Plug/RJ45 connector)

Cable length (L)

010	1000 mm
020	2000 mm
030	3000 mm
050	5000 mm
100	10000 mm

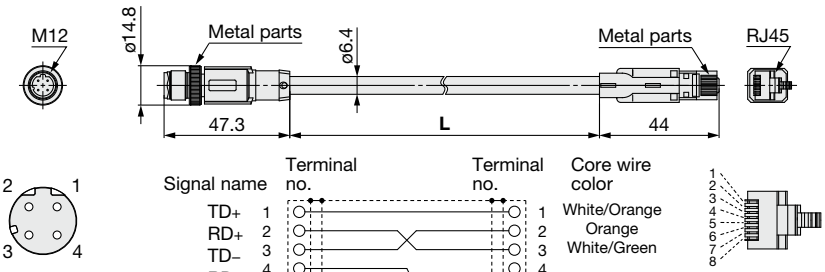

Plug connector pin arrangement D-coded

Plug connector pin arrangement

Connections (Straight cable)

Item	Specifications
Cable O.D.	ø6.4 mm
Conductor nominal cross section	0.14 mm²/AWG26
Wire O.D. (Including insulator)	0.98 mm
Min. bending radius (Fixed)	26 mm

❾ Communication Cable

For EtherCAT® **For PROFINET** **For EtherNet/IP™**

PCA-1446566 (Plug)

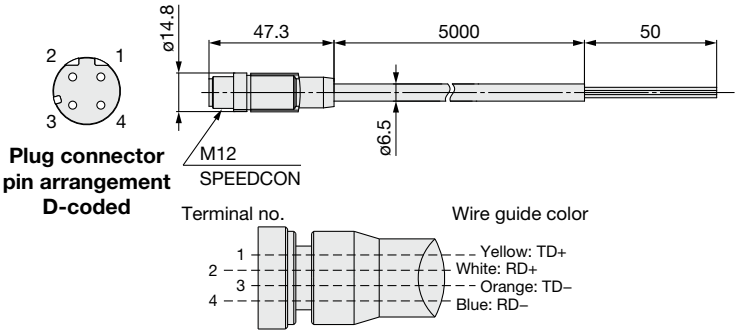

Connections

Item	Specifications
Cable O.D.	ø6.5 mm
Conductor nominal cross section	AWG22
Wire O.D. (Including insulator)	1.55 mm
Min. bending radius (Fixed)	45.5 mm

EX9-AC 005 EN-PSPS (With connector on both ends (Plug/Plug))

Cable length (L)

005	500 mm
010	1000 mm
020	2000 mm
030	3000 mm
050	5000 mm
100	10000 mm

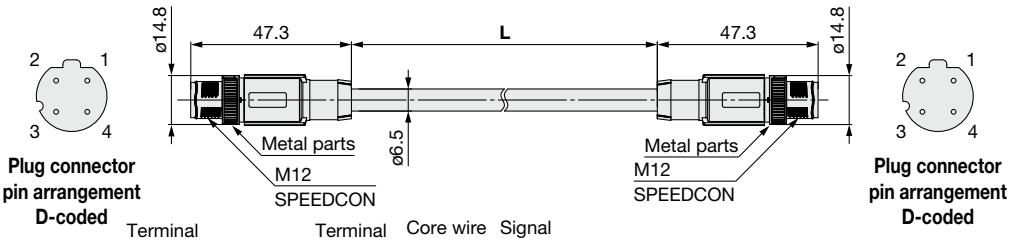

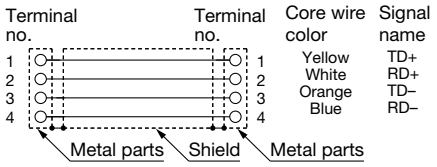

Connections (Straight cable)

Item	Specifications
Cable O.D.	ø6.5 mm
Conductor nominal cross section	0.34 mm²/AWG22
Wire O.D. (Including insulator)	1.55 mm
Min. bending radius (Fixed)	19.5 mm

EX9-AC 005 EN-PAPA (With right angled connector on both ends (Plug/Plug))

Cable length (L)

005	500 mm
010	1000 mm
020	2000 mm
030	3000 mm
050	5000 mm
100	10000 mm

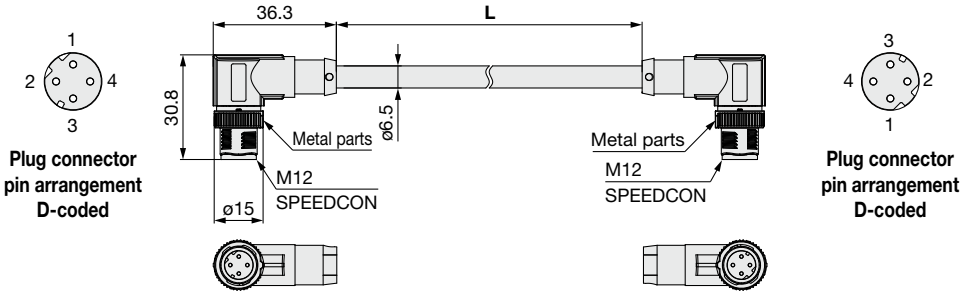

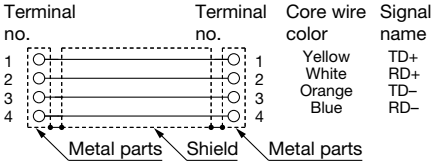

Connections (Straight cable)

Item	Specifications
Cable O.D.	ø6.5 mm
Conductor nominal cross section	0.34 mm²/AWG22
Wire O.D. (Including insulator)	1.55 mm
Min. bending radius (Fixed)	19.5 mm

⑩ Field-wireable Communication Connector

Plug

For EtherCAT® **For PROFINET** **For EtherNet/IP™**

PCA-1446553

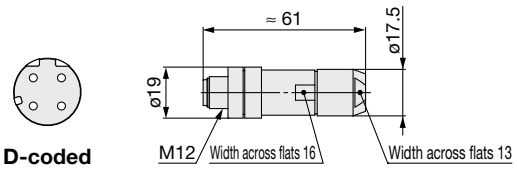

Applicable Cable

Item	Specifications
Cable O.D.	4.0 to 8.0 mm
Wire gauge (Stranded wire cross section)	0.14 to 0.34 mm²/AWG26 to 22

∗ The table above shows the specifications for the applicable cable. Adaptation for the connector may vary on account of the conductor construction of the electric wire.

⑪ I/O Cable with Connector, I/O Connector

For details, refer to the **Web Catalog**.

Name	Use	Part no.	Description
Cable with connector	For sensor	**PCA-1557769**	Cable with M12 connector (4 pins/3 m)
		PCA-1557772	Cable with M8 connector (3 pins/3 m)
Field-wireable connector	For sensor	**PCA-1557730**	Field-wireable connector (M8/3 pins/Plug/Piercecon® connection)
		PCA-1557743	Field-wireable connector (M12/4 pins/Plug/QUICKON-ONE connection/SPEEDCON)
		PCA-1557756	
Y connector	For sensor	**PCA-1557785**	Y connector (2 x M12 (5 pins)-M12 (5 pins)/SPEEDCON)
		PCA-1557798	Y connector (2 x M8 (3 pins)-M12 (4 pins)/SPEEDCON)

∗ When using the Y connector, connect it to the connector on the I/O module through the sensor cable (PCA-1557769) with the M12 connector.

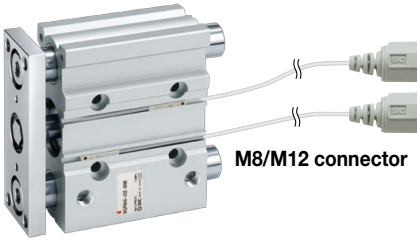

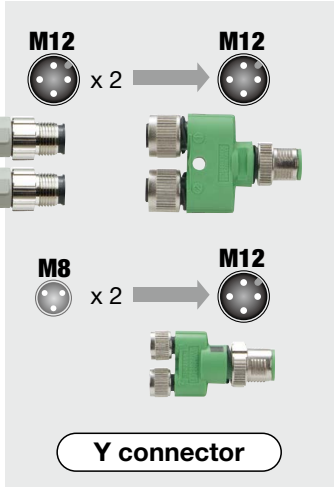

For IO-Link Module

EX9-AC 005 -SSPS **(With connector on both ends (Socket/Plug))**

Cable length (L)

005	500 mm
010	1000 mm
020	2000 mm
030	3000 mm
050	5000 mm
100	10000 mm

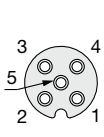

Socket connector pin arrangement
A-coded (Normal key)

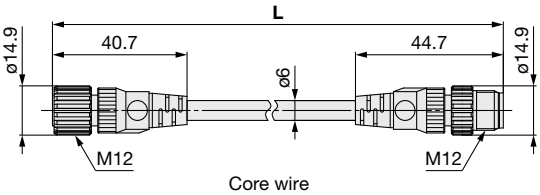

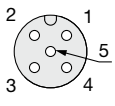

Plug connector pin arrangement
A-coded (Normal key)

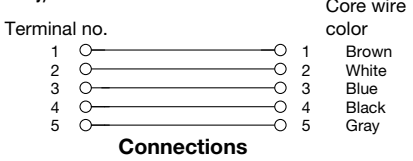

Connections

Item	Specifications
Cable O.D.	ø6 mm
Conductor nominal cross section	0.3 mm²/AWG22
Wire O.D. (Including conductor)	1.5 mm
Min. bending radius (Fixed)	40 mm

⓫ I/O Cable with Connector, I/O Connector

Port Class B EX260-SIL SI Unit and Port Class A IO-Link Master Connection Example

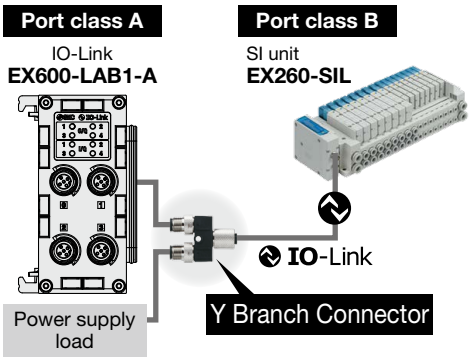

Port class A compliant

A special wiring Y branch connector is available.

Used when connecting to a port class A type IO-Link master, which is often used when connecting to an IO-Link sensor

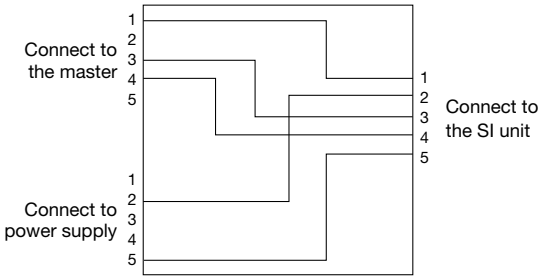

Y Branch Connector for IO-Link

This connector is used to supply power to the valve manifold by branching the IO-Link communication cable in cases where a port class A IO-Link master is used.

EX9-ACY02-S

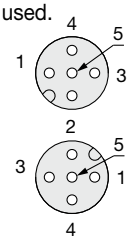

Plug connector pin arrangement A-coded (Normal key)

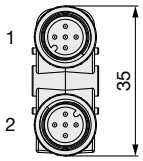

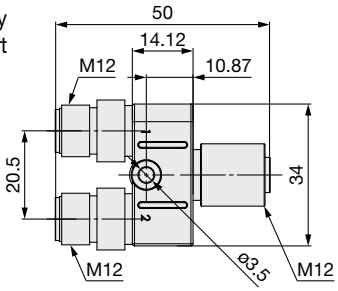

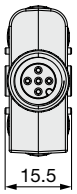

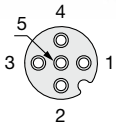

Socket connector pin arrangement A-coded (Normal key)

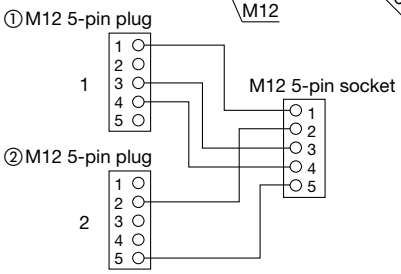

Solenoid valve power supply cable side pin arrangement when using a branch connector

1	—	Unused
2	SV24V	+24 V for solenoid valve
3	—	Unused
4	—	Unused
5	SV0V	0 V for solenoid valve

⓬ IO-Link Device Tool License Key

USB dongle

EX9-ZSW-LDT1

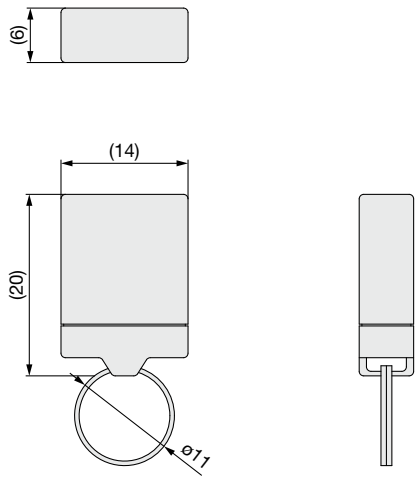

* The IO-Link Device Tool V5-PE (V5 or later only) manufactured by TMG is required for setting IO-Link devices.
The IO-Link Device Tool can be downloaded for free from TMG's website. However, to use it for more than 30 days, a license key for the IO-Link Device Tool is required.

EX600 Series
Specific Product Precautions

Be sure to read this before handling the products. Refer to the back cover for safety instructions. For fieldbus system precautions, refer to the "Operation Manual" on the SMC website: https://www.smcworld.com

Mounting

⚠ Caution

1. **When handling and assembling modules, do not touch the sharp metal parts of the connector or plug.**
2. **When connecting 5 stations or more, be sure to use the intermediate reinforcing brace (EX600-ZMB1 or EX600-ZMB2).**

Operating Environment

⚠ Caution

1. **Select the proper type of enclosure according to the operating environment.**

   IP65/67 is achieved when the following conditions are met.

   1) Provide appropriate wiring between all modules using electrical wiring cables, communication connectors and cables with M12 connectors.
   2) Appropriately mount each module and valve manifold.
   3) Be sure to mount a seal cap on any unused connectors.

   If using in an environment that is exposed to water splashes, please take measures such as using a cover.

■ **Trademark**
EtherNet/IP® is a registered trademark of ODVA, Inc.
CIP Safety™ is a trademark of ODVA, Inc.
QuickConnect™ is a trademark of ODVA.
EtherCAT® and Safety over EtherCAT® are registered trademark and patented technology, licensed by Beckhoff Automation GmbH, Germany.
Piercecon® is licensed by CONINVERS GmbH.

⚠ Safety Instructions

These safety instructions are intended to prevent hazardous situations and/or equipment damage. These instructions indicate the level of potential hazard with the labels of **"Caution," "Warning"** or **"Danger."** They are all important notes for safety and must be followed in addition to International Standards (ISO/IEC)*1), and other safety regulations.

⚠ Danger : **Danger** indicates a hazard with a high level of risk which, if not avoided, will result in death or serious injury.

⚠ Warning: **Warning** indicates a hazard with a medium level of risk which, if not avoided, could result in death or serious injury.

⚠ Caution: **Caution** indicates a hazard with a low level of risk which, if not avoided, could result in minor or moderate injury.

*1) ISO 4414: Pneumatic fluid power - General rules and safety requirements for systems and their components
ISO 4413: Hydraulic fluid power - General rules and safety requirements for systems and their components
IEC 60204-1: Safety of machinery - Electrical equipment of machines - Part 1: General requirements
ISO 10218-1: Robots and robotic devices - Safety requirements for industrial robots - Part 1:Robots
etc.

⚠ Warning

1. The compatibility of the product is the responsibility of the person who designs the equipment or decides its specifications.

Since the product specified here is used under various operating conditions, its compatibility with specific equipment must be decided by the person who designs the equipment or decides its specifications based on necessary analysis and test results. The expected performance and safety assurance of the equipment will be the responsibility of the person who has determined its compatibility with the product. This person should also continuously review all specifications of the product referring to its latest catalog information, with a view to giving due consideration to any possibility of equipment failure when configuring the equipment.

2. Only personnel with appropriate training should operate machinery and equipment.

The product specified here may become unsafe if handled incorrectly. The assembly, operation and maintenance of machines or equipment including our products must be performed by an operator who is appropriately trained and experienced.

3. Do not service or attempt to remove product and machinery/equipment until safety is confirmed.

1. The inspection and maintenance of machinery/equipment should only be performed after measures to prevent falling or runaway of the driven objects have been confirmed.
2. When the product is to be removed, confirm that the safety measures as mentioned above are implemented and the power from any appropriate source is cut, and read and understand the specific product precautions of all relevant products carefully.
3. Before machinery/equipment is restarted, take measures to prevent unexpected operation and malfunction.

4. SMC products cannot be used beyond their specifications. They are not developed, designed, and manufactured to be used under the following conditions or environments. Use under such conditions or environments is not allowed.

1. Conditions and environments outside of the given specifications, or use outdoors or in a place exposed to direct sunlight.
2. Use for nuclear power, railways, aviation, space equipment, ships, vehicles, military application, equipment affecting human life, body, and property, combustion equipment, entertainment equipment, emergency shut-off circuits, press clutches, brake circuits, safety equipment, etc., and use for applications that do not conform to standard specifications such as catalogs and operation manuals.
3. Use for interlock circuits, except for use with double interlock such as installing a mechanical protection function in case of failure. Please periodically inspect the product to confirm that the product is operating properly.

⚠ Caution

SMC develops, designs, and manufactures products to be used for automatic control equipment, and provides them for peaceful use in manufacturing industries.
Use in non-manufacturing industries is not allowed.
Products SMC manufactures and sells cannot be used for the purpose of transactions or certification specified in the Measurement Act of each country.
The new Measurement Act prohibits use of any unit other than SI units in Japan.

Limited warranty and Disclaimer/ Compliance Requirements

The product used is subject to the following "Limited warranty and Disclaimer" and "Compliance Requirements".
Read and accept them before using the product.

Limited warranty and Disclaimer

1. The warranty period of the product is 1 year in service or 1.5 years after the product is delivered, whichever is first.*2)
   Also, the product may have specified durability, running distance or replacement parts. Please consult your nearest sales branch.
2. For any failure or damage reported within the warranty period which is clearly our responsibility, a replacement product or necessary parts will be provided.
   This limited warranty applies only to our product independently, and not to any other damage incurred due to the failure of the product.
3. Prior to using SMC products, please read and understand the warranty terms and disclaimers noted in the specified catalog for the particular products.

***2) Suction cups (Vacuum pads) are excluded from this 1 year warranty.**
A suction cup (vacuum pad) is a consumable part, so it is warranted for a year after it is delivered.
Also, even within the warranty period, the wear of a product due to the use of the suction cup (vacuum pad) or failure due to the deterioration of rubber material are not allowed by the limited warranty.

Compliance Requirements

1. The use of SMC products with production equipment for the manufacture of weapons of mass destruction (WMD) or any other weapon is strictly prohibited.
2. The exports of SMC products or technology from one country to another are governed by the relevant security laws and regulations of the countries involved in the transaction. Prior to the shipment of a SMC product to another country, assure that all local rules governing that export are known and followed.

Revision History

Edition B
* PROFINET, PROFIsafe, and EtherCAT/FSoE have been added as compatible protocols.
* The safety I/O module compatible EX600-FV□3/4 have been added.
* The number of pages has been increased from 26 to 33.

⚠ Safety Instructions	Be sure to read the "Handling Precautions for SMC Products" (M-E03-3) and "Operation Manual" before use.

A Specifications are subject to change without prior notice and any obligation on the part of the manufacturer.
© 2026 SMC Corporation All Rights Reserved